MEDEN INMED
PROFESSIONAL MEDICAL ENGINEERING



AI

Rehabilitation Tables

2026/2027

This catalogue contains information on, among other things, medical devices that should be handled by qualified medical personnel and used in accordance with the instructions for use or the label.

Remarks:

- Medical devices are marked with sign MD
- In addition to massage tables, you will also find here other types of tables, e.g. tilting or examination and treatment tables.
- This catalogue is for information purposes only and shall not consitute a commercial offer within the meaning of Art. 66 of the Civil Code.
- The manufacturer reserves the right to make design changes that do not affect the basic functionality and safety requirements. The colours in the catalogue may differ slightly from the actual colours due to the printing process.
- Images in this catalogue may contain options that are subject to a fee.



Meden-Inmed was founded in 1989 as a company employing two people. Since then, it has gained a strong market position through hard work and reliability. Initially a small distributor of a few renowned manufacturers, now a dynamic company with over 470 employees - professionals in the fields of electronics, mechanics, economy, sales and marketing.

Modern rehabilitation combines specialized knowledge with state of the art technology. We knew that when we started our own production plant in 1996 and are even more convinced of it now, when we create new products and widen our offer of medical devices each year. We make sure they are modern, efficient, comfortable and user friendly. We are always happy to see new ideas turn into new products.

Every product we have sold proves the trust our customers have placed in us. Behind every device we deliver there is a long-term relationship. Our customers consciously select a supplier that not only delivers the equipment, but can also guarantee quality and professional service. It has always been our duty and our motto.

To address the growing needs of our customers we have now expanded the range of our products. Our goal is to deliver you complete range of equipment required by professionals in the field of rehabilitation. This catalogue shows just a part of our offer. We encourage you to visit our website.

We will help you choose the best equipment that is tailored to your needs. Let this catalogue be your guide to our products. Meden-Inmed's Team will assist you in every matter of our cooperation. We are always here to hear your voice. Your feedback is always welcome and appreciated.

Maciej Zinka
CEO

Ph.D. Eng. Wiesław Zinka
Senior President

Our awards:



European Medal 2024, 2023, 2022, 2021, 2020, 2016, 2013, 2012, 2011, 2010, 2009, 2008, 2007

European Economic and Social Committee and Business Center Club



Diamond of FORBES Magazine 2009, 2019



Ambassador of Polish Economy in category:

Exporter, 2014, 2022
XXI century solution creator, 2013
Partner of foreign companies, 2012



Perfect Line 2009 SPA Business



Gazelle of Business 2008
Gazelle of Business 2007
Gazelle of Business 2006

Awards of biggest rehabilitation equipment fairs in Poland - Rehabilitacja Fairs



REHABILITACJA

XXVII	Rehabilitation Fair Łódź 2019
XXII	Rehabilitation Fair Łódź 2014
XXI	Rehabilitacja Łódź 2013
XVI	Rehabilitacja Łódź 2008
XV	Rehabilitacja Łódź 2007
XIV	Rehabilitacja Łódź 2006
XIII	Rehabilitacja Łódź 2005
X	Rehabilitacja Łódź 2002



5th rank on the list of 100 best companies in the region

II Euroregional Economic Presentation Szczecin 2002



Investment of the year 2009

Polish Federation of Engineering Associations



Product of West Pomerania 2015, 2012, 2010, 2009
Product of Pomerania 2009, 2008, 2007

Polish Federation of Engineering Associations



Product of Koszalin 2014, 2013, 2010, 2009, 2008, 2007, 2006

Polish Federation of Engineering Associations



Best Distributor Award 2019

KOELIS



Pioneer Distributor Award 2017

Business Centre Club



Leader of Polish business 2016, 2017, 2019

Business Center Club

Types of wheeling system:

F0

Composed of 2 legs with rubber feet an 2 small wheels for moving of Prestige Table by lifting it from one side. It is recommended for users who relocate their Prestige Table less frequently.

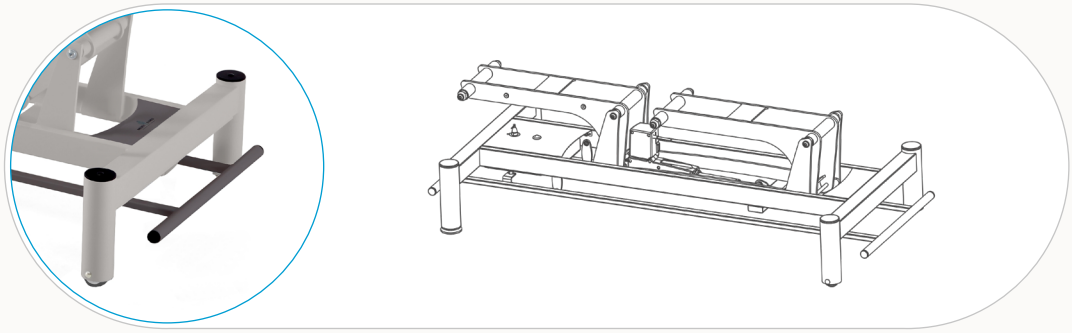

Massage tables
Terapeuta SCM Prestige

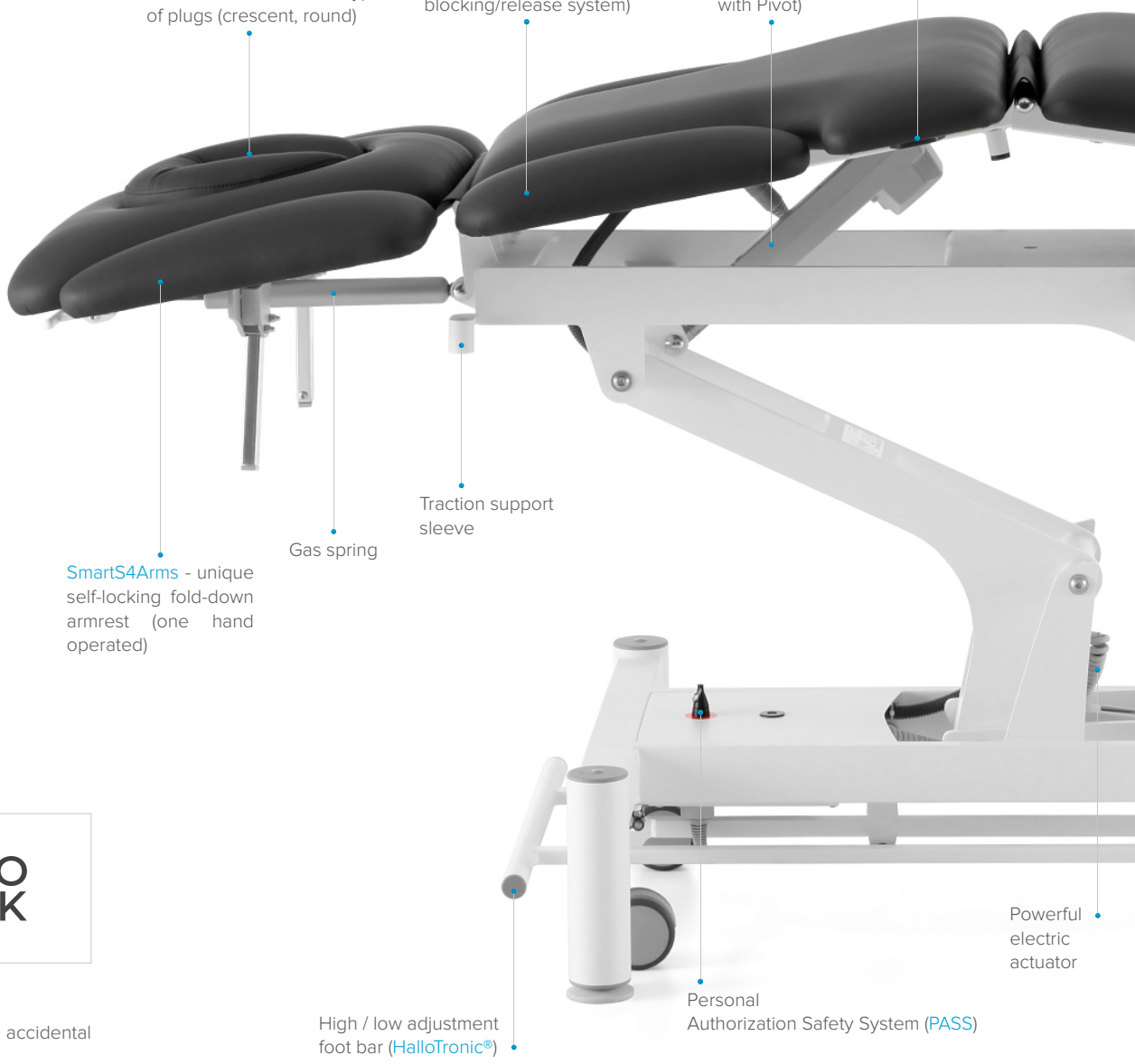

AUTO LOCK

AutoLock option

ensures protection against accidental changes in table position.

F4

Composed of 4 directional castors with central brake allows you very easy and fast relocation of Prestige Table with or without a patient.

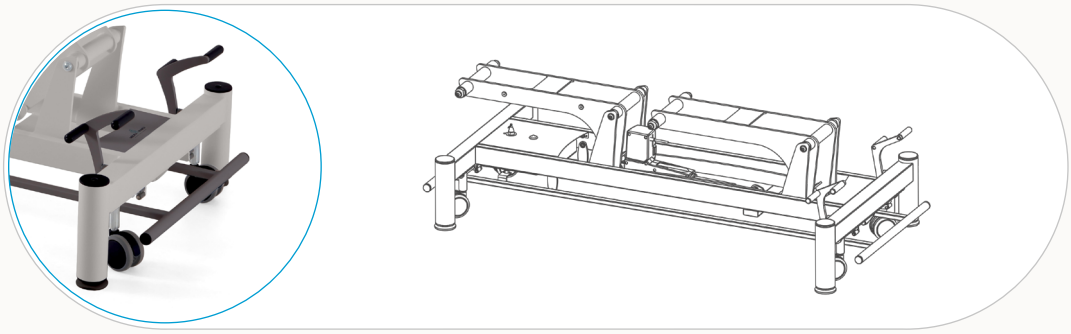

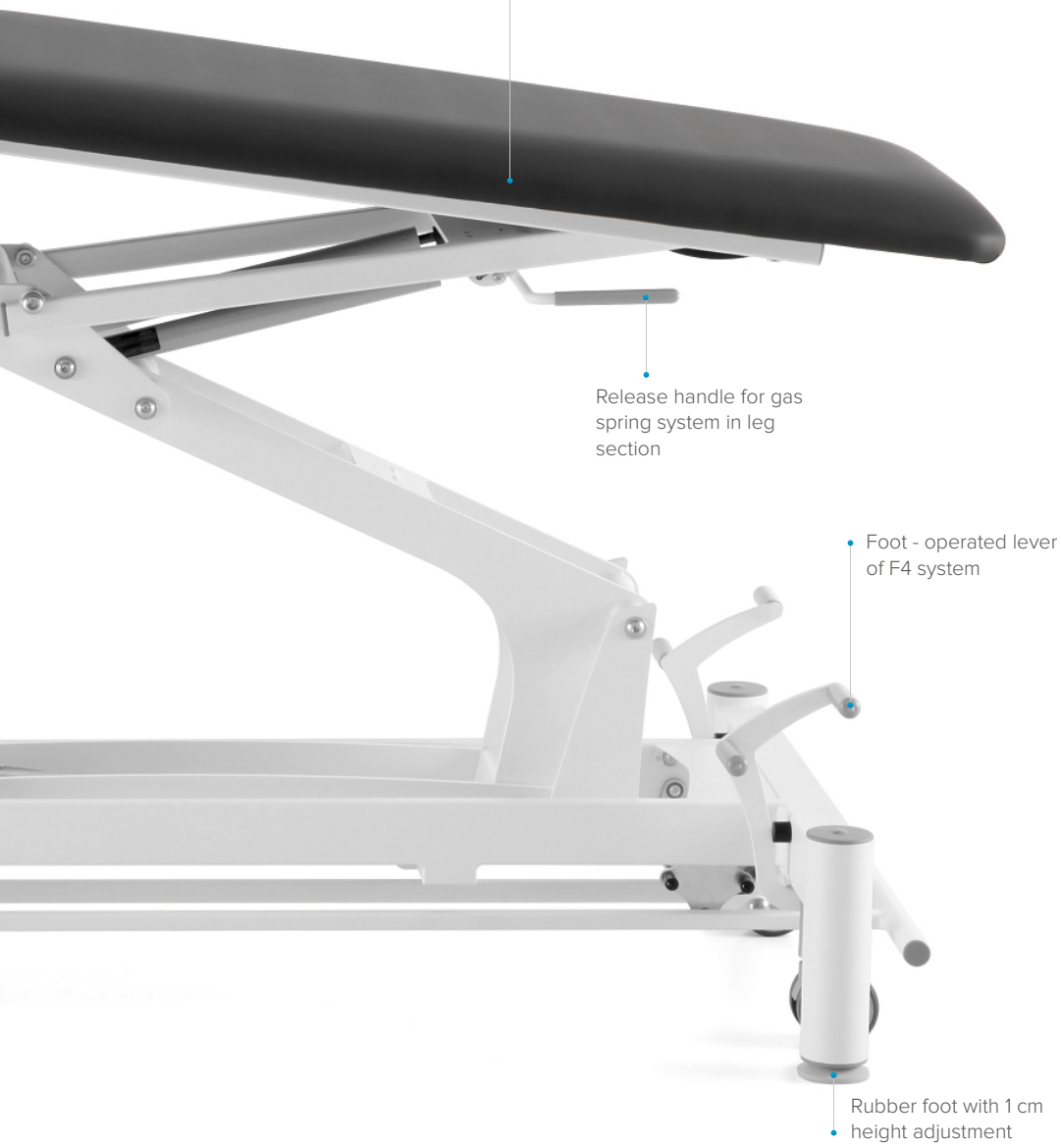

The transition to LUX upholstery as the standard upholstery is currently in progress. Once completed, the current standard upholstery will be phased out.

Years of experience

..., our individual research and passion for innovations led to creation of a stable, **reliable and very functional table line** for massage.

You can now enjoy the **high quality and high functionality of Terapeuta Prestige Table Line**. Just choose one of Prestige Tables which will suit your needs and the needs of your patients. We care about your opinion so if you think that something should be changed or added in the current Terapeuta Prestige Table Line please let us know what you think.

Unique features of Prestige Tables:

1. High quality upholstery!

In order to guarantee comfort of patients and high functionality for users each table has a **two-layer padding** with specially selected density of foams. After years of checking various upholstery samples, we finally found an upholstery which is:

- Non-flammable
- Bio-compatible
- Scratchproof



High quality finish

The features of upholstery together with high durability of the powder paint used for covering the metal elements will allow you to enjoy your Terapeuta Prestige Table in your practice.

There is possibility to buy couches also with upholstery made with 100% Polyurethane (LUX Upholstery*).

* The transition to LUX upholstery as the standard upholstery is currently in progress. Once completed, the current standard upholstery will be phased out.

2. We care about your working comfort!

That's why we invented the unique HalloTronic® System that enables high/low height adjustment via hallotrons without the use of mechanical switches. Thanks to HalloTronic® System you can choose the right height of your Prestige Table without effort and noise. This solution assures the comfort of patient and comfort of work. HalloTronic® System allows you to adjust height of your table with help of a foot bar from each side of your Prestige Table with just a slight movement of your foot. Enjoy the benefits of your Prestige Table and unique features of HalloTronic® System:

- High/low height adjustment via electronically controlled actuator
- No noise during lifting
- Long life span
- Reliability
- Operated with minimal force by foot
- High/low height adjustment via shifting of bar, easily accessible from each side of Prestige Table

Prestige Tables ensure smooth high/low height adjustment with a powerful electric actuator with lifting capacity up to 225 kg.



3. Wheeling systems tailored to your needs!

You can choose between F0 and F4 wheeling system. F0 system composed of 2 legs and 2 small wheels allows for moving of Prestige Table by lifting it from one side. The system is recommended for users who relocate their Prestige Table less frequently. F4 system composed of 4 directional castors with central brake allows you for a very easy and fast relocation of Prestige Table with or without a patient.

4. Easy adjustment as you wish!

Enjoy the **easy adjustment of Prestige Table's sections** with the help of gas springs. Ergonomically located and designed release handles **allow you to adjust sections of your Prestige Table the way you need** practically without any effort and with one hand. Choose postural drainage (pivot) option to allow for easy positioning of the patient in order to perform better. You are able to adjust the postural drainage via an electronically controlled actuator by easily accessible two postural drainage control switches from both sides of your Prestige Table. Unique self-locking fold-down armrest (SmartS4Arms) for a very easy (one hand operated) adjustment.

Management System EN ISO 13485:2016 +AC:2018+A11:2021
TÜVRheinland CERTIFIED
www.tuv.com ID 0000073249



5. Guarantee your practice the ultimate safety!

All Prestige Tables have an integrated electronic control unit allowing for height adjustment and adjustment of the postural drainage option with an indication of stand-by mode (green light) and **Personal Authorization Safety System** (PASS). Each Prestige Table is equipped with two magnetic safety keys (PASS Keys) in order to prevent unauthorized use of a table which may lead to severe accidents and compensation claims. What is more, all Prestige Tables have a **special safety system** that prevents table from folding down in case of power shortage or actuator damage.
Tables are manufactured in conformity with the certified quality management system: ISO 13485:2016.

6. The devil is in the details!

All details of Prestige Tables are designed to help you in your practice, with their functionality, durability and great design. You can take advantage of **semi-automatic blocking/release system for fold-down side sections, comfortable armrests and ergonomic table top** allowing for an easy access to the patient. **Rubber feet** increase the stability. The patients can feel comfort of the **anatomical design of the face hole**. We covered screws and other protruding elements with unobtrusive plastic covers.

7. We care about the production process!

All frames are welded automatically by high quality robotic system, which makes Prestige Tables **very stable and resistant over years**. Metal parts are being covered using the most advanced technological processes in a modern powder painting line. This means that you will enjoy the high quality of your Prestige Table for years and the maintenance (e.g. cleaning) will be a pleasure.

Terapeuta SCM-2
Prestige M-S2.F0/M-S2.F4

Massage table

MD





Box dimensions: **220 x 85 x 75 cm** Weight: **+50 kg**

Length: **202 cm**

Height: **47-95 cm**

Width: **69 cm**

Weight: **80/95 kg**

Max load*: **225 kg**

Features:

- 2-section massage table.
- Adjustable head section from -70° to +40° with a gas spring.
- Face hole in the head section with 2 removable face hole covers (round, crescent).
- Two-layer padding with upholstery in many colours.
- Powder coated, very stable steel frame.
- 2 side brackets for fixation of stabilization belts and elastic bands.
- Traction support sleeves.
- Personal Authorization Safety System with 2 safety magnetic keys.
- HalloTronic® System for electric high/low height adjustment from 47 to 95 cm with a lifting capacity up to 225 kg.
- Powder coated steel high/low height adjustment foot bar accessible from each side of the table.
- Rubber feet with 1 cm height adjustment allowing for the levelling of the table.
- Two ways of frame painting: „white" or „twintone".

Table articulations:

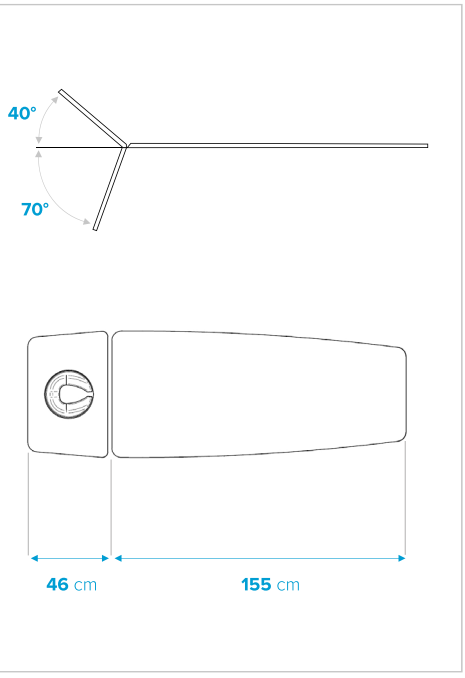

Additional option:

- Built-in adjustable surface heating system.
- Upholstery of 80 mm thickness.
- Upholstery of 80 cm width.
- LUX upholstery (PU).
- AutoLock.

Additional accessories:

- Paper holder.
- Wedges.
- Bolsters, semi-bolsters.
- Traction supports.
- Stabilization belts.
- Stools for therapist.

Ordering information:

M-S2.F0: 2-section massage table with wheeling system composed of 2 small wheels and 2 legs with rubber feet.

M-S2.F4: 2-section massage table with dual-lever retractable castor wheeling system composed of 4 directional castors with central brake and 4 legs with rubber feet.

* max. lifting capacity

Terapeuta SCM-3
Prestige M-S3.F0/M-S3.F4

Massage table

MD





Box dimensions: **220 x 85 x 75 cm** Weight: **+50 kg**

Length: **205 cm**

Height: **47-95 cm**

Width: **69 cm**

Weight: **85/100 kg**

Max load*: **225 kg**

Features:

- 3-section massage table.
- Adjustable head section from -70° to +40° with a gas spring.
- Face hole in the head section with 2 removable face hole covers (round, crescent).
- Adjustable leg section from -10° to 80° with 2 gas springs.
- Release handle of the gas spring system in the leg section accessible from both sides of the table.
- Two-layer padding with upholstery in many colours.
- Powder coated, very stable steel frame.
- Traction support sleeves.
- Personal Authorization Safety System with 2 safety magnetic keys.
- HalloTronic® System for electric high/low height adjustment from 47 to 95 cm with a lifting capacity up to 225 kg.
- Powder coated steel high/low height adjustment foot bar accessible from each side of the table.
- Rubber feet with 1 cm height adjustment allowing for the levelling of the table.
- Two ways of frame painting: „white" or „twintone".

Table articulations:

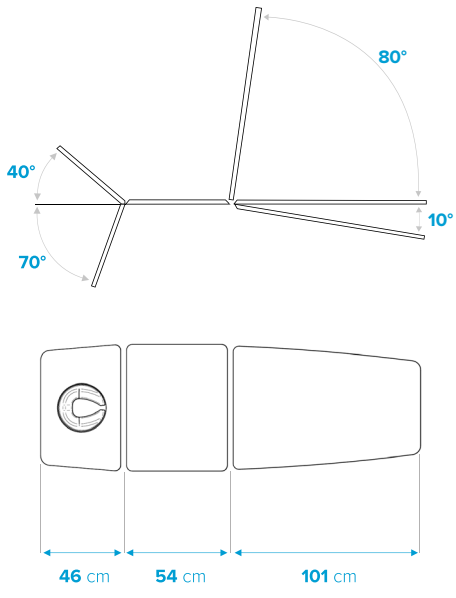

Additional option:

- Built-in adjustable surface heating system.
- Upholstery of 80 mm thickness.
- Upholstery of 80 cm width.
- LUX upholstery (PU).
- AutoLock.

Additional accessories:

- Paper holder.
- Wedges.
- Bolsters, semi-bolsters.
- Traction supports.
- Stools for therapist.

Ordering information:

M-S3.F0: 3-section massage table with wheeling system composed of 2 small wheels and 2 legs with rubber feet.

M-S3.F4: 3-section massage table with dual-lever retractable castor wheeling system composed of 4 directional castors with central brake and 4 legs with rubber feet.

* max. lifting capacity

Terapeuta SCM-3
Prestige M-P3.F0/M-P3.F4

Massage table

MD





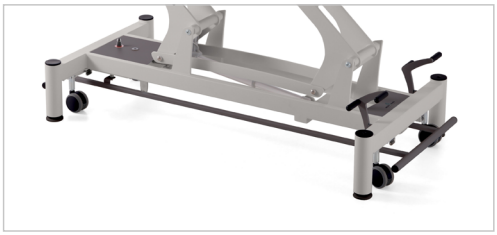

2 ways of frame painting

Box dimensions: **220 x 85 x 75 cm** Weight: **+50 kg**

Length: **205 cm**

Height: **51-99 cm**

Width: **69 cm**

Weight: **95/110 kg**

Max load*: **225 kg**

Features:

- 3-section massage table.
- Postural drainage with an electric actuator operated by 2 switches from both sides of the table.
- Adjustable head section from -70° to +40° with a gas spring.
- Face hole in the head section with 2 removable face hole covers (round, crescent).
- Adjustable leg section from -10° to 80° with 2 gas springs.
- Release handle of the gas spring system in the leg section accessible from both sides of the table.
- Two-layer padding with upholstery in many colours.
- Powder coated, very stable steel frame.
- Traction support sleeves.
- Personal Authorization Safety System with 2 magnetic safety keys.
- HalloTronic® System for electric high/low height adjustment from 51 to 99 cm with a lifting capacity up to 225 kg.
- Powder coated steel high/low height adjustment foot bar accessible from each side of the table.
- Rubber feet with 1 cm height adjustment allowing for the levelling of the table.
- Two ways of frame painting: „white" or „twintone".

Table articulations:

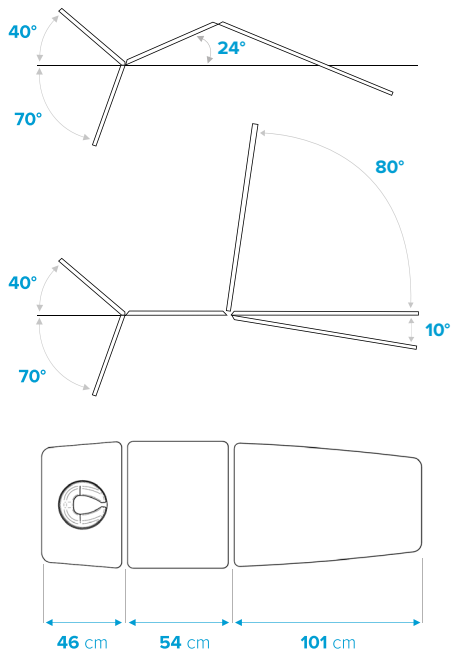

Additional option:

- Built-in adjustable surface heating system.
- Upholstery of 80 mm thickness.
- Upholstery of 80 cm width.
- LUX upholstery (PU).
- AutoLock.

Additional accessories:

- Paper holder.
- Wedges.
- Bolsters, semi-bolsters.
- Traction supports.
- Stools for therapist.

Ordering information:

M-P3.F0: 3-section massage table with wheeling system composed of 2 small wheels and 2 legs with rubber feet.

M-P3.F4: 3-section massage table with dual-lever retractable castor wheeling system composed of 4 directional castors with central brake and 4 legs with rubber feet.

* max. lifting capacity

Terapeuta SCM-4
Prestige M-S4.F0/M-S4.F4

Massage table

MD





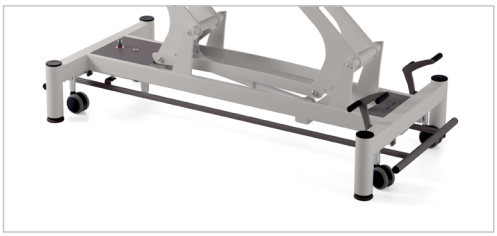

2 ways of frame painting

Box dimensions: **220 x 85 x 75 cm** Weight: **+50 kg**

Length: **202 cm**

Height: **47-95 cm**

Width: **69 cm**

Weight: **87/102 kg**

Max load*: **225 kg**

Features:

- 4-section massage table.
- Adjustable head section from -70° to +40° with a gas spring.
- Face hole in the head section with 2 removable face hole covers (round, crescent).
- Innovative self-locking fold-down armrests in head section (one hand operated) - SmartS4Arms (Smart Slide For Arms).
- Two-layer padding with upholstery in many colours.
- Powder coated, very stable steel frame.
- 2 side brackets for the fixation of stabilization belts and elastic bands.
- Traction support sleeves.
- Personal Authorization Safety System with 2 magnetic safety keys.
- HalloTronic® System for electric high/low height adjustment from 47 to 95 cm with a lifting capacity up to 225 kg.
- Powder coated steel high/low height adjustment foot bar accessible from each side of the table.
- Rubber feet with 1 cm height adjustment allowing for the levelling of the table.
- Two ways of frame painting: „white" or „twintone".

Table articulations:

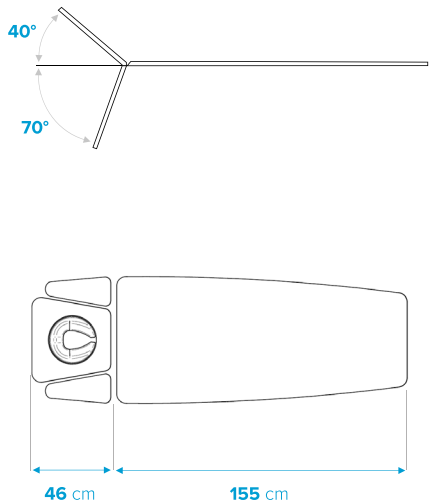

Additional option:

- Built-in adjustable surface heating system.
- Upholstery of 80 mm thickness.
- Upholstery of 80 cm width.
- LUX upholstery (PU).
- AutoLock.

Additional accessories:

- Paper holder.
- Wedges.
- Bolsters, semi-bolsters.
- Traction supports.
- Stabilization belts.
- Stools for therapist.

Ordering information:

M-S4.F0: 4-section massage table with wheeling system composed of 2 small wheels and 2 legs with rubber feet.

M-S4.F4: 4-section massage table with dual-lever retractable castor wheeling system composed of 4 directional castors with central brake and 4 legs with rubber feet.

* max. lifting capacity

Terapeuta SCM-5
Prestige M-S5.F0/M-S5.F4

Massage table



MD

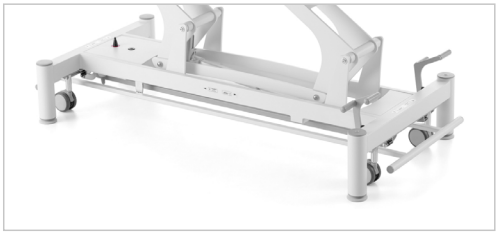

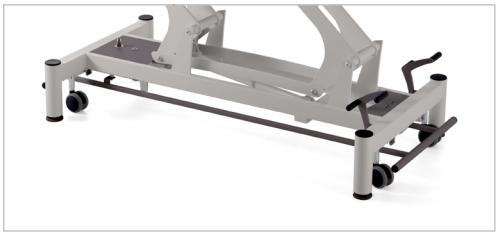

2 ways of frame painting

Box dimensions: **220 x 85 x 75 cm** Weight: **+50 kg**

Length: **205 cm**

Height: **47-95 cm**

Width: **69 cm**

Weight: **92/107 kg**

Max load*: **225 kg**

Features:

- 5-section massage table.
- Adjustable head section from -70° to +40° with a gas spring.
- Face hole in the head section with 2 removable face hole covers (round, crescent).
- Innovative self-locking fold-down armrests in head section (one hand operated) - SmartS4Arms (Smart Slide For Arms).
- Adjustable leg section from -10° to 80° with 2 gas springs.
- Release handle of the gas spring system in the leg section accessible from both sides of the table.
- Two-layer padding with upholstery in many colours.
- Powder coated, very stable steel frame.
- Traction support sleeves.
- Personal Authorization Safety System with 2 magnetic safety keys.
- HalloTronic® System for electric high/low height adjustment from 47 to 95 cm with a lifting capacity up to 225 kg.
- Powder coated steel high/low height adjustment foot bar accessible from each side of the table.
- Rubber feet with 1 cm height adjustment allowing for the levelling of the table.
- Two ways of frame painting: „white" or „twintone".

Table articulations:

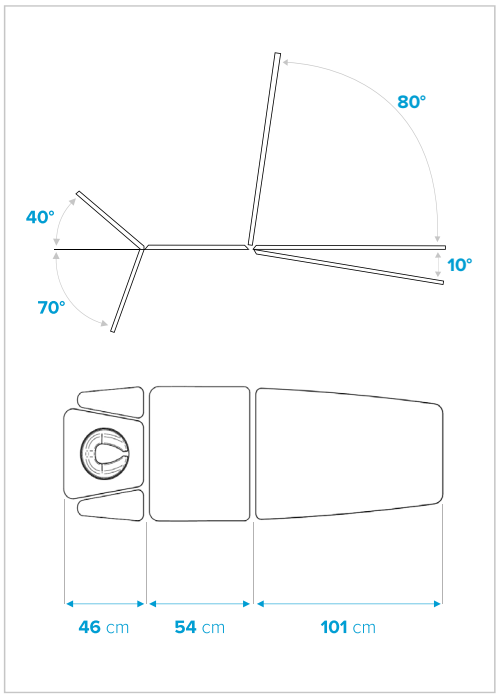

Additional option:

- Built-in adjustable surface heating system.
- Upholstery of 80 mm thickness.
- Upholstery of 80 cm width.
- LUX upholstery (PU).
- AutoLock.

Additional accessories:

- Paper holder.
- Wedges.
- Bolsters, semi-bolsters.
- Traction supports.
- Stools for therapist.

Ordering information:

M-S5.F0: 5-section massage table with wheeling system composed of 2 small wheels and 2 legs with rubber feet.

M-S5.F4: 5-section massage table with dual-lever retractable castor wheeling system composed of 4 directional castors with central brake and 4 legs with rubber feet.

* max. lifting capacity

Terapeuta SCM-5
Prestige M-P5.F0/M-P5.F4

Massage table



MD



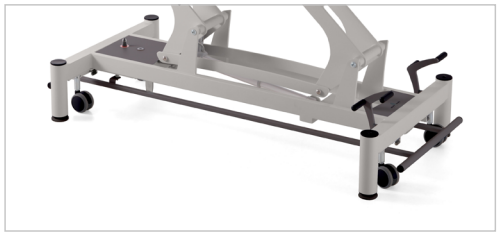

2 ways of frame painting

Box dimensions: **220 x 85 x 75 cm** Weight: **+50 kg**

Length: **205 cm**

Height: **51-99 cm**

Width: **69 cm**

Weight: **102/117 kg**

Max load*: **225 kg**

Features:

- 5-section massage table.
- Postural drainage with an electric actuator operated by 2 switches from both sides of the table.
- Adjustable head section from -70° to +40° with a gas spring.
- Face hole in the head section with 2 removable face hole covers (round, crescent).
- Innovative self-locking fold-down armrests in head section (one hand operated) - SmartS4Arms (Smart Slide For Arms).
- Adjustable leg section from -10° to 80° with 2 gas springs.
- Release handle of the gas spring system in the leg section accessible from both sides of the table.
- Two-layer padding with upholstery in many colours.
- Powder coated, very stable steel frame.
- Traction support sleeves
- Personal Authorization Safety System with 2 magnetic safety keys.
- HalloTronic® System for electric high/low height adjustment from 51 to 99 cm with a lifting capacity up to 225 kg.
- Powder coated steel high/low height adjustment foot bar accessible from each side of the table.
- Rubber feet with 1 cm height adjustment allowing for the levelling of the table.
- Two ways of frame painting: „white" or „twintone".

Table articulations:

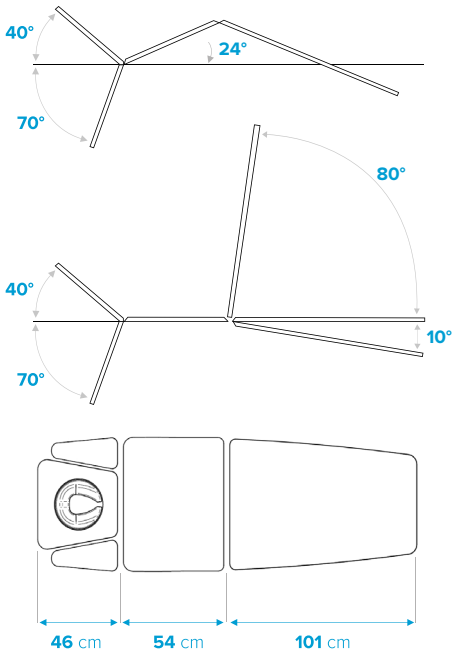

Additional option:

- Built-in adjustable surface heating system.
- Upholstery of 80 mm thickness.
- Upholstery of 80 cm width.
- LUX upholstery (PU).
- AutoLock

Additional accessories:

- Paper holder.
- Wedges.
- Bolsters, semi-bolsters.
- Traction supports.
- Stools for therapist.

Ordering information:

M-P5.F0: 5-section massage table with wheeling system composed of 2 small wheels and 2 legs with rubber feet.

M-P5.F4: 5-section massage table with dual-lever retractable castor wheeling system composed of 4 directional castors with central brake and 4 legs with rubber feet.

* max. lifting capacity

Terapeuta SCM-7
Prestige M-S7.F0/M-S7.F4

Massage table

MD





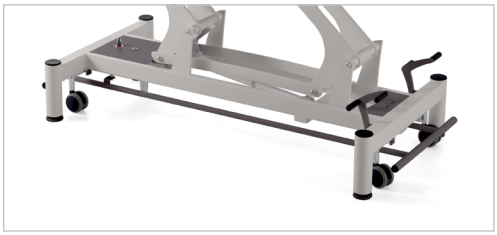

2 ways of frame painting

Box dimensions: **220 x 85 x 75 cm** Weight: **+50 kg**

Length: **205 cm**

Height: **47-95 cm**

Width: **69 cm**

Weight: **95/110 kg**

Max load*: **225 kg**

Features:

- 7-section for massage table.
- Adjustable head section from -70° to +40° with a gas spring.
- Face hole in the head section with 2 removable face hole covers (round, crescent).
- Fold-down side sections in the middle section with a semi-automatic blocking/ release system.
- Innovative self-locking fold-down armrests in head section (one hand operated) - SmartS4Arms (Smart Slide For Arms).
- Adjustable leg section from -10° to 80° with 2 gas springs.
- Release handle of the gas spring system in the leg section accessible from both sides of the table.
- Two-layer padding with upholstery in many colours.
- Powder coated, very stable steel frame.
- Traction support sleeves.
- Personal Authorization Safety System with 2 magnetic safety keys.
- HalloTronic® System for electric high/low height adjustment from 47 to 95 cm with a lifting capacity up to 225 kg.
- Powder coated steel high/low height adjustment foot bar accessible from each side of the table.
- Rubber feet with 1 cm height adjustment allowing for the levelling of the table.
- Two ways of frame painting: „white" or „twintone".

Table articulations:

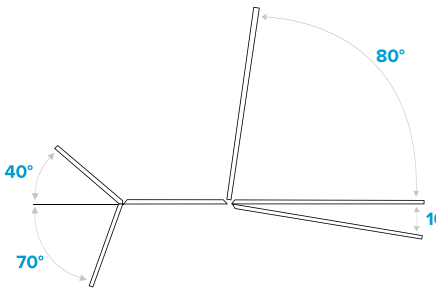

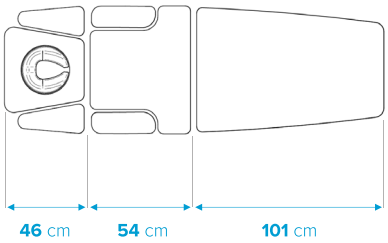

Additional option:

- Built-in adjustable surface heating system.
- Upholstery of 80 mm thickness.
- Upholstery of 80 cm width.
- LUX upholstery (PU).
- AutoLock.

Additional accessories:

- Paper holder.
- Wedges.
- Bolsters, semi-bolsters.
- Traction supports.
- Stools for therapist.

Ordering information:

M-S7.F0: 7-section massage table with wheeling system composed of 2 small wheels and 2 legs with rubber feet.

M-S7.F4: 7-section massage table with dual-lever retractable castor wheeling system composed of 4 directional castors with central brake and 4 legs with rubber feet.

* max. lifting capacity

Terapeuta SCM-7
Prestige M-P7.F0/M-P7.F4

Massage table



MD



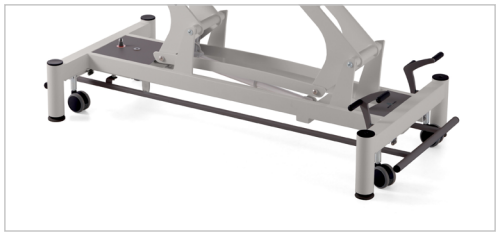

2 ways of frame painting

Box dimensions: **220 x 85 x 75 cm** Weight: **+50 kg**

Length: **205 cm**

Height: **51-99 cm**

Width: **69 cm**

Weight: **105/120 kg**

Max load*: **225 kg**

Features:

- 7-section massage table.
- Postural drainage with an electric actuator operated by 2 switches from both sides of the table.
- Adjustable head section from -70° to +40° with a gas spring.
- Face hole in the head section with 2 removable face hole covers (round, crescent).
- Innovative self-locking fold-down armrests in head section (one hand operated) - SmartS4Arms (Smart Slide For Arms).
- Adjustable leg section from -10° to 80° with 2 gas springs.
- Fold-down side sections in the middle section with a semi-automatic blocking/ release system.
- Release handle of the gas spring system in the leg section accessible from both sides of the table.
- Two-layer padding with upholstery in many colours.
- Powder coated, very stable steel frame.
- Traction support sleeves.
- Personal Authorization Safety System with 2 magnetic safety keys.
- HalloTronic® System for electric high/low height adjustment from 51 to 99 cm with a lifting capacity up to 225 kg.
- Powder coated steel high/low height adjustment foot bar accessible from each side of the table.
- Rubber feet with 1 cm height adjustment allowing for the levelling of the table.
- Two ways of frame painting: „white" or „twintone".

Table articulations:

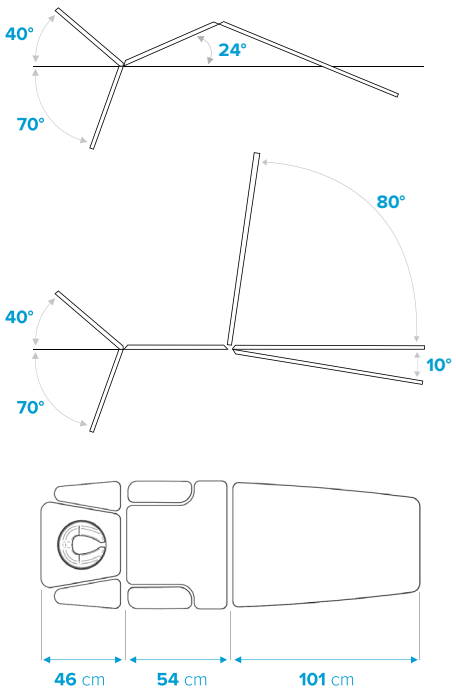

Additional option:

- Built-in adjustable surface heating system.
- Upholstery of 80 mm thickness.
- Upholstery of 80 cm width.
- LUX upholstery (PU).
- AutoLock.

Additional accessories:

- Paper holder.
- Wedges.
- Bolsters, semi-bolsters.
- Traction supports.
- Stools for therapist.

Ordering information:

M-P7.F0: 7-section massage table with wheeling system composed of 2 small wheels and 2 legs with rubber feet.

M-P7.F4: 7-section massage table with dual-lever retractable castor wheeling system composed of 4 directional castors with central brake and 4 legs with rubber feet.

* max. lifting capacity

Terapeuta SCM-2
Prestige E-S2.F0/E-S2.F4

Massage table

MD







2 ways of frame painting

Box dimensions: **220 x 85 x 75 cm** Weight: **+50 kg**

Length: **202 cm**

Height: **47-95 cm**

Width: **69 cm**

Weight: **80/95 kg**

Max load*: **225 kg**

Features:

- 2-section massage table with a long head section.
- Adjustable long head section from 0° to +85° with 2 gas springs.
- Face hole in the head section with a removable face hole cover.
- Two-layer padding with upholstery in many colours.
- Powder coated, very stable steel frame.
- Optional 2 side brackets for the fixation of stabilization belts and elastic bands or 2 retractable side railings for fall prevention.
- Personal Authorization Safety System with 2 safety magnetic keys.
- HalloTronic® System for electric high/low height adjustment from 47 to 95 cm with a lifting capacity up to 225 kg
- Powder coated steel high/low height adjustment foot bar accessible from each side of the table.
- Rubber feet with 1 cm height adjustment allowing for the levelling of the table.
- Two ways of frame painting: „white" or „twintone".

Table articulations:

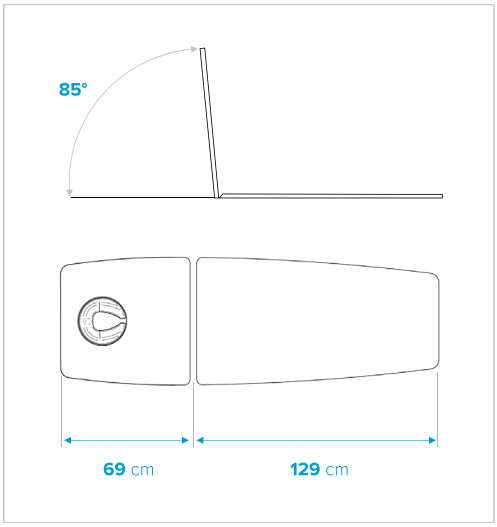

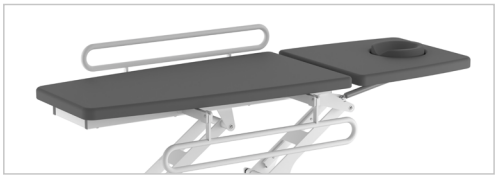

Additional option:

- Built-in adjustable surface heating system.
- Upholstery of 80 mm thickness.
- Upholstery of 80 cm width.
- LUX upholstery (PU).
- AutoLock.

Additional accessories:

- Paper holder.
- Optional: 2 side brackets or 2 retractable side railings.
- Wedges.
- Bolsters, semi-bolsters.
- Stabilization belts.
- Stools for therapist.

Ordering information:

E-S2.F0: 2-section massage table with wheeling system composed of 2 small wheels and 2 legs with rubber feet.

E-S2.F4: 2-section massage table with dual-lever retractable castor wheeling system composed of 4 directional castors with central brake and 4 legs with rubber feet.

* max. lifting capacity

Terapeuta Prestige Line







Technical data:	M-S2	M-S3	M-P3	M-S4	M-S5	M-P5	M-S7	M-P7	E-S2
Dimensions (length x width) [cm]:	202 x 69	205 x 69	205 x 69	202 x 69	205 x 69	205 x 69	205 x 69	205 x 69	202 x 69
Number of sections:	2	3	3	4	5	5	7	7	2
Head section inclination angle [°]:	-70/+40	-70/+40	-70/+40	-70/+40	-70/+40	-70/+40	-70/+40	-70/+40	0/+85
Middle section inclination angle [°]:	-	-	0/+24	--	-	0/+24	-	0/+24	-
Leg section inclination angle [°]:	-	-10/+80	-10/+80	-	-10/+80	-10/+80	-10/+80	-10/+80	-
Height adjustment [cm]:	47-95	47-95	51-99	47-95	47-95	51-99	47-95	51-99	47-95
Weight F0/F4 [kg]:	80/95	85/100	95/110	87/102	92/107	102/117	95/110	105/120	80/95
Max. lifting capacity [kg]:	225	225	225	225	225	225	225	225	225
Power supply [V/Hz]:	100-240/50-60	100-240/50-60	100-240/50-60	100-240/50-60	100-240/50-60	100-240/50-60	100-240/50-60	100-240/50-60	100-240/50-60
Max. working load [kg]:	300	300	300	300	300	300	300	300	300

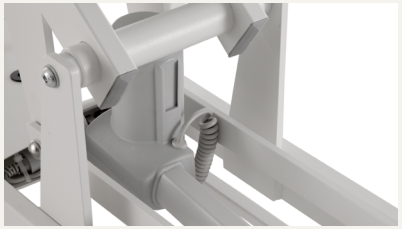

Powerful electric actuator



Adjustment of postural drainage



Breathing slot shaped to place the nose and chin



Personal Authorization Safety System (PASS)



Hallotronic® System for electric height adjustment

Types of base:

F0

Composed of 2 legs with rubber feet and 2 small wheels for moving of Elemental Table by lifting it from one side. The system is recommended for users who relocate their Elemental Table less frequently.



Massage tables
Elemental



AUTO LOCK

AutoLock option

ensures protection against accidental changes in table position.

F0 + F2

Made on two small wheels and two feet, with an attached mechanism F2 of two swivel wheels, facilitating table transport.

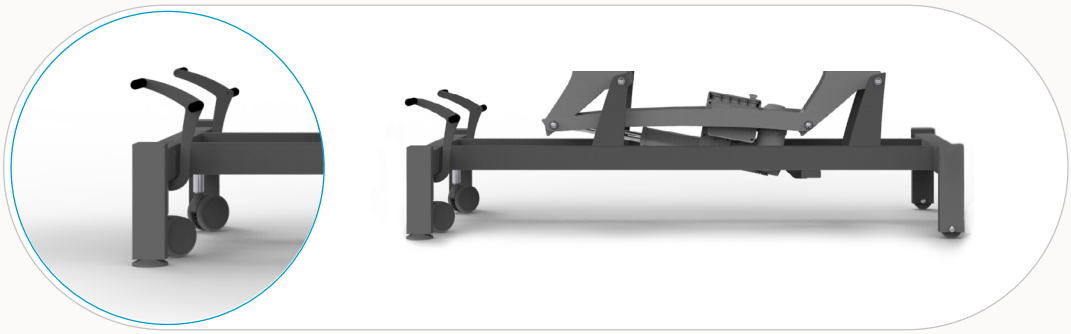





Electric height adjustment



SmartS4Arms

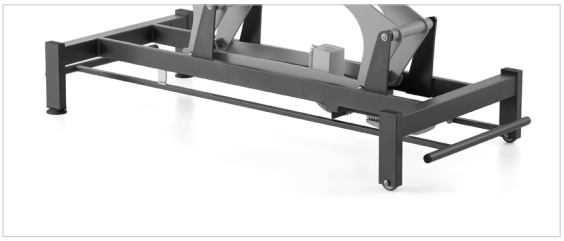

High/low height adjustment foot bar - option
(replaces foot- or hand-operated controller)

The transition to LUX upholstery as the standard upholstery is currently in progress. Once completed, the current standard upholstery will be phased out.

Elemental Ice | Massage table

ICE S2.F0:

MD



(Hand-operated controller)

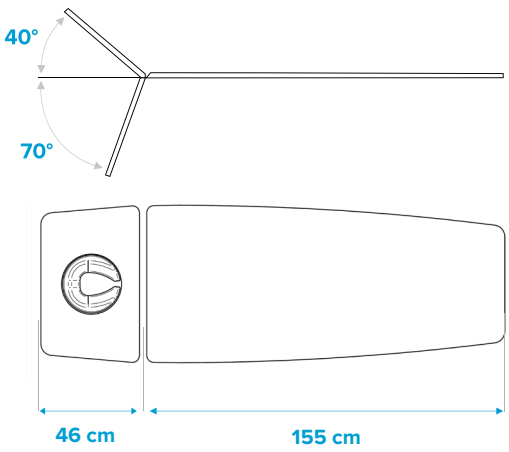

ICE S4.F0:

MD



(Hand-operated controller)

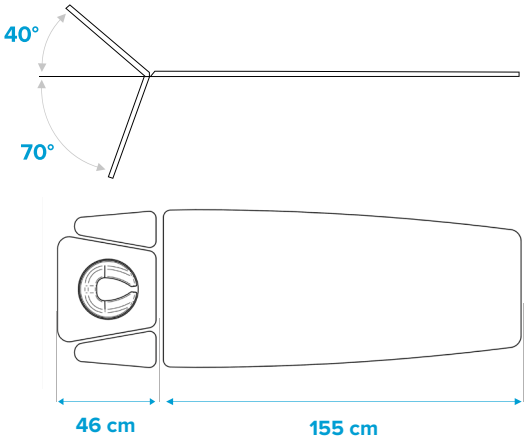

ICE E2.F0:

MD



(Foot-operated controller)

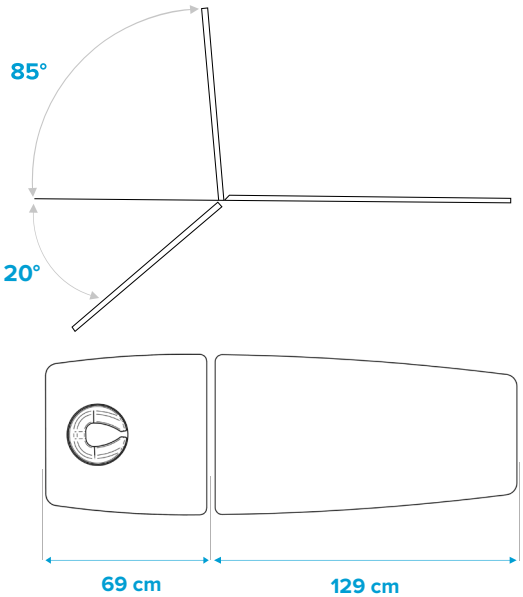

Elemental Fire | Massage table

FIRE S3.F0:

MD



(High/low height adjust. foot bar)

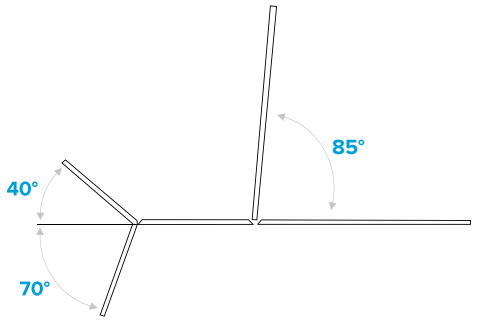

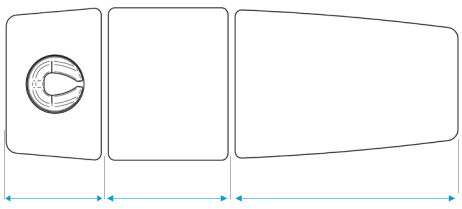

FIRE S5.F0:

MD



(High/low height adjust. foot bar)

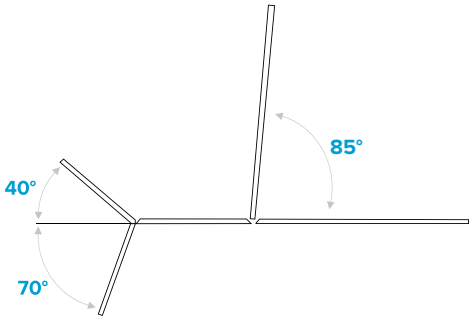

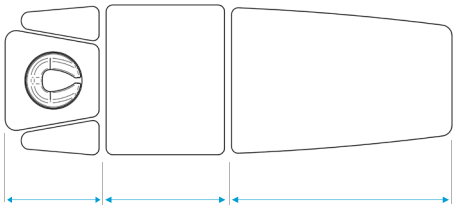

Additional accessories/options:

Lifter frame F2



Horizontal folding barriers (E2 only)



Folding barriers (E2 only)

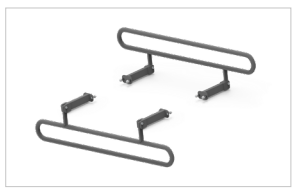

Wedges, bolsters, traction supports, belts



Paper holder type 3

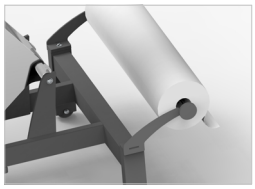

Paper holder type 1 (E2 only)



Foot-operated, hand-operated controller*



Foot bar



* as option the table can be equiped with addittional remote controller (in this case the table will have 2 different controllers: hand-operated and foot-operated)

Elemental Ice, Fire | Massage table

MD





Box dimensions: **220 x 85 x 75 cm** Weight: **+50 kg**

Length: **202-205 cm**

Height: **48-96 cm**

Width: **69 cm**

Weight: **80-88 kg**

Max load*: **180 kg**

Features:

- 2-, 3-, 4-, 5-section massage tables.
- Adjustable head, leg section with gas springs.
- Round face hole in the head section with 2 removable face hole covers (crescent, round).
- Self-locking fold-down armrest in head section (S4, S5) - SmartS4Arms (Smart Slide For Arms).
- Two-layer padding with upholstery in many colours.
- Powder coated, very stable two-colour steel frame.
- 2 side brackets for the fixation of the stabilization belt (excl. E2).
- Traction support sleeves (excl. E2)
- Electric height adjustment: 48-96 cm via hand-operated remote controller (with authorization) or foot controller to choose in standard.
- High/low height adjustment foot bar accessible from each side of the table - option (replaces remote controller).
- Lifting capacity up to 180 kg, working load up to 250 kg.
- Locking safety system on the hand-operated remote controller.
- Basic wheeling system F0 composed of 2 small wheels and 2 legs with rubber feet.
- Rubber feet with 1 cm height adjustment allowing for the levelling of the table.
- LUX upholstery (PU) as option.
- AutoLock as option.



Crescent cover

Technical data:

	ICE S2	ICE E-S2	ICE S4	FIRE S3	FIRE S5
Dimensions (length x width) [cm]:	202 x 69	202 x 69	202 x 69	205 x 69	205 x 69
Number of sections:	2	2	4	3	5
Head section inclination angle [°]:	-70/+40	-20/+85	-70/+40	-70/+40	-70/+40
Middle section inclination angle [°]:	--	--	--	--	--
Leg section inclination angle [°]:	--	--	--	0/+85	0/+85
Height adjustment [cm]:	48-96	48-96	48-96	48-96	48-96
Weight [kg]:	81,5	81	80	86	88
Max. lifting capacity [kg]:	180	180	180	180	180
Power supply [V/Hz]:	100-240/50-60	100-240/50-60	100-240/50-60	100-240/50-60	100-240/50-60
Max. working load [kg]:	250	250	250	250	250

* max. lifting capacity

Accessories

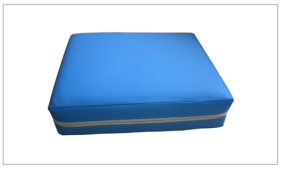

Pillow



Traction support



Wedges (different sizes) Semi-bolsters (different sizes) Bolsters (different sizes)

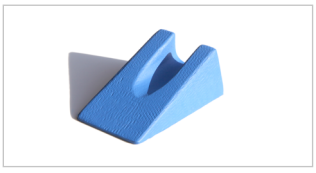

Kaltenborn wedge (small/large)



Magnetic safety key



Covers for face hole



Stabilization belt

Paper holders for:

PRESTIGE E-S2
THERASPACE E-S2
ELEMENTAL E2

type 1
to upper frame



R9006DS
ANTRACYT

ELEMENTAL

type 3
to lower frame



R9007DS

SAFARI,
PRESTIGE

type 8
to lower frame



R9006DS

SAFARI ELEPHANT

type 8B
to lower frame



R9006DS

NEXUS E-S2, S2, S4
SAFARI E-S2

type 9
to upper frame



R9002DS

THERASPACE M-S2, M-S4
NEXUS S3, S5

type 4
to upper frame



R9007DS

THERASPACE X, Z

type 13
to upper frame



R9006DS

NEXUS P3, P5

type 14
to upper frame



R9002DS

Upholstery colour options:

Enjoy the high quality upholstery in the colours you like.
You can now choose non-flammable, bio-compatible and scratchproof upholstery for your tables, couches, stools as well as wedges and bolsters in colours matching the design and atmosphere of your place. Softness and durability of the upholstery provide comfort to patients as well as therapists.

Standard upholstery colour*:

00 ecru	01 beige	02 blue	03 navy blue	04 terracotta
05 brown	06 grey	07 graphite	08 black	09 red
11 honey	12 sea green	13 orange	14 lime	15 light blue

* The transition to LUX upholstery as the standard upholstery is currently in progress. Once completed, the current standard upholstery will be phased out.

LUX upholstery colour:

Surface composition: 100% Polyurethane Backing composition: 100% Polyester

OM006 white	OM240 beige	OM315 sky	OM221 blue	OM314 cement	OM076 olive grey	OM173 dark brown
OM225 black	OM469 lima	OM157 forest	OM053 red	OM217 bordeaux	OM075 orange	OM095 mostaza

Wheeling system:

F4

Composed of 4 liftable casters with a central locking mechanism and 4 rubber feet.



Massage tables
Theraspace



AUTO LOCK

AutoLock option

ensures protection against accidental changes in table position.







3 YEARS of guarantee

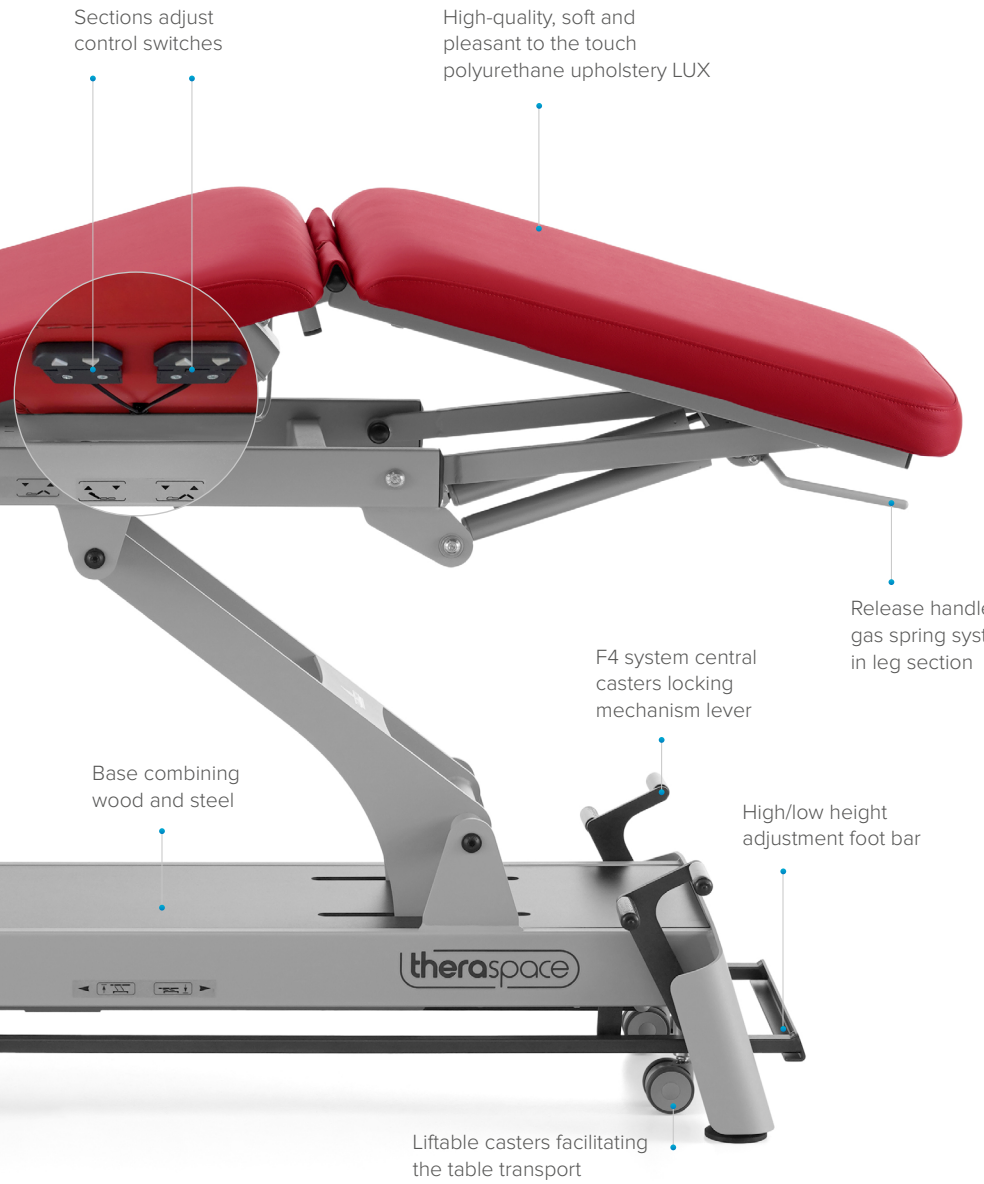

Theraspace E-S2.F4 | Massage table





High/low height adjustment foot bar

Box dimensions: **220 x 85 x 80 cm** Weight: **+50 kg**

Length: **202 cm**

Height: **47-95 cm**

Width: **69 cm**

Weight: **115 kg**

Load*: **200 kg**

Features:

- 2-section massage table with long head section.
- High-quality, soft and pleasant to the touch polyurethane upholstery.
- Two-layer padding (2 cm foam 40 kg/cm^3 + 2 cm foam 44 kg/cm^3).
- Stretched upholstery.
- Adjusting the angle of the head section with a gas spring (from -20 to 85°).
- Round breathing hole in head section with 2 types of plugs (crescent, round).
- Total length of the bed 202 cm.
- Maximum safe load of the table when raising-lowering the table ≤ 200 kg.
- Maximum safe working load of the table ≤ 275 kg.
- Safe electric actuator against crushing.
- High/low height adjustment foot bar (47-95 cm).
- F4 wheel system consisting of 4 liftable casters with a central locking mechanism and 4 feet.
- A frame combining wood and steel.
- Protection against accidental start-up.
- Linak actuator.

Settings and dimensions:

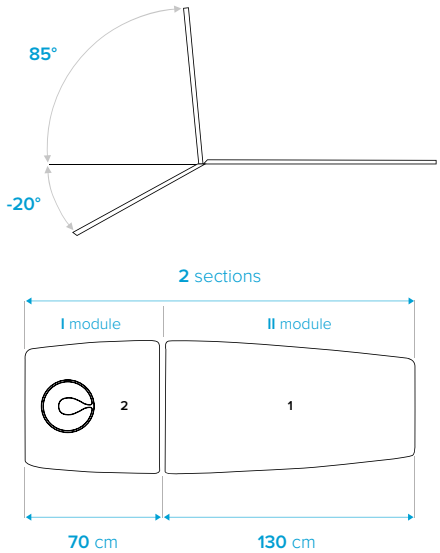

Additional accessories:

- Paper holder.
- Wedges.
- Bolsters, semi-bolsters.
- Horizontal folding barriers.
- Stools for therapist.

Additional option:

- Built-in adjustable surface heating system.
- AutoLock.



Stretched upholstery

Ordering information:

E-S2.F4: 2-section massage table with wheeling system composed of 4 liftable casters with a central locking mechanism and 4 rubber feet.

* max. safe load when raising-lowering the table

Theraspace M-S2.F4 | Massage table



MD



High/low height adjustment foot bar

Box dimensions: **220 x 85 x 80 cm** Weight: **+50 kg**

Length: **203 cm**

Height: **47-95 cm**

Width: **69 cm**

Weight: **115 kg**

Load*: **200 kg**

Features:

- 2-section massage table.
- High-quality, soft and pleasant to the touch polyurethane upholstery.
- Two-layer padding (2 cm foam 40 kg/cm^3 + 2 cm foam 44 kg/cm^3).
- Stretched upholstery.
- Round breathing hole in head section with 2 types of plugs (crescent, round).
- Adjusting the angle of the head section with a gas spring (from -70 to 40°).
- Total length of the bed 203 cm.
- Maximum safe load of the table when raising-lowering the table ≤ 200 kg.
- Maximum safe working load of the table ≤ 275 kg.
- Safe electric actuator against crushing.
- 2 side brackets for fixation of stabilization belts.
- 2 traction support sleeves.
- High/low height adjustment foot bar (47-95 cm).
- F4 wheel system consisting of 4 liftable casters with a central locking mechanism and 4 rubber feet.
- A frame combining wood and steel.
- Protection against accidental start-up.
- Linak actuator.

Settings and dimensions:

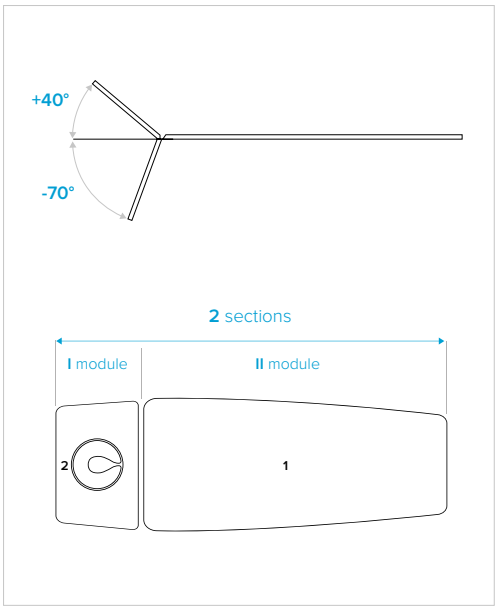

Additional accessories:

- Paper holder.
- Wedges.
- Traction supports.
- Stabilization belts.
- Bolsters, semi-bolsters.
- Stools for therapist.

Additional option:

- Built-in adjustable surface heating system.
- AutoLock.



Stretched upholstery

Ordering information:

M-S2.F4: 2-section massage table with wheeling system composed of 4 liftable casters with a central locking mechanism and 4 rubber feet.

* max. safe load when raising-lowering the table

Theraspace M-S4.F4 | 2-section massage table



MD



High/low height adjustment foot bar

Box dimensions: **220 x 85 x 80 cm** Weight: **+50 kg**

Length: **203 cm**

Height: **47-95 cm**

Width: **69 cm**

Weight: **115 kg**

Load*: **200 kg**

Features:

- 4-section massage table.
- High-quality, soft and pleasant to the touch polyurethane upholstery.
- Two-layer padding (2 cm foam 40 kg/cm^3 + 2 cm foam 44 kg/cm^3).
- Stretched upholstery.
- Round breathing hole in head section with 2 types of plugs (crescent, round).
- Adjusting the angle of the head section with a gas spring (from -70 to 40°).
- Total length of the bed 203 cm.
- Maximum safe load of the table when raising-lowering the table ≤ 200 kg.
- Maximum safe working load of the table ≤ 275 kg.
- Safe electric actuator against crushing.
- High/low height adjustment foot bar (47-95 cm).
- 2 side brackets for fixation of stabilization belts.
- 2 traction support sleeves.
- F4 wheel system consisting of 4 liftable casters with a central locking mechanism and 4 rubber feet.
- A frame combining wood and steel.
- Protection against accidental start-up.
- Linak actuator.
- One-handed adjustment of armrest - **SmartS4Arms**

Settings and dimensions:

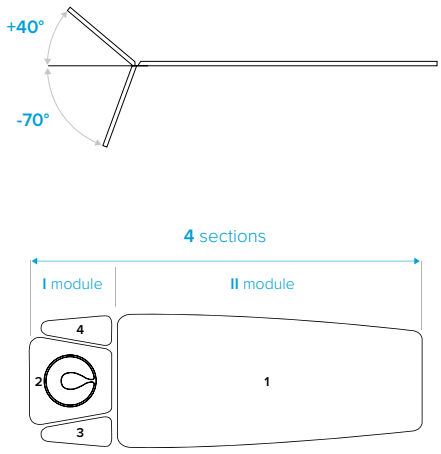

Additional accessories:

- Paper holder.
- Wedges.
- Bolsters, semi-bolsters.
- Traction supports.
- Stabilization belts.
- Stools for therapist.

Additional option:

- Built-in adjustable surface heating system.
- AutoLock.



Stretched upholstery

Ordering information:

M-S4 .F4: 4-section massage table with wheeling system composed of 4 liftable casters with a central locking mechanism and 4 rubber feet.

* max. safe load when raising-lowering the table

Theraspace Z3.F4 | Massage table

MD







Box dimensions: **220 x 85 x 80 cm** Weight: **+50 kg**

Length: **205 cm**

Height: **49-95 cm**

Width: **67 cm**

Weight: **110 kg**

Load*: **200 kg**

Features:

- 3-section massage table.
- High-quality, soft and pleasant to the touch polyurethane upholstery.
- Two-layer padding (3 cm foam 90 kg/cm^3 + 1 cm foam 43 kg/cm^3).
- Stitched upholstery.
- Round breathing hole in head section with 2 types of plugs (crescent, round).
- Adjusting the angle of the head section with a gas spring (from -65 to 30°).
- Middle section adjustment angle: -20° (Pivot adjustment).
- Head + middle section adjustment angle: +80°.
- Leg section adjustment angle: +8°.
- Total length of the table 205 cm.
- Maximum safe load of the table when raising-lowering the table ≤ 200 kg.
- Maximum safe working load of the table ≤ 275 kg.
- Safe electric actuator against crushing.
- High/low height adjustment foot bar (49-95 cm).
- F4 wheel system consisting of 4 liftable casters with a central locking mechanism and 4 rubber feet.
- A frame combining wood and steel.
- Wireless remote control with three programmable positions (option).
- Electric adjustment of: head + middle, middle + leg sections via control switches.
- Protection against accidental start-up.
- Linak actuator.

Settings and dimensions:

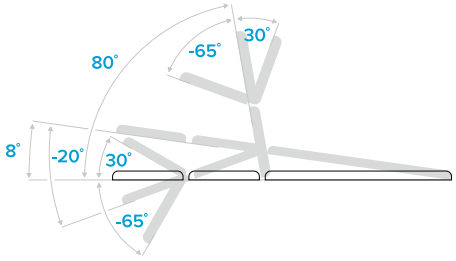

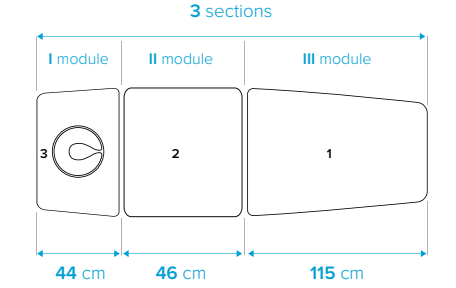

Additional accessories:

- Paper holder.
- Wedges.
- Bolsters, semi-bolsters.
- Stools for therapist.

Additional option:

- Wireless remote control.
- Built-in adjustable surface heating system.
- AutoLock.



Remote control



Stitched upholstery

Ordering information:

Z3.F4: 3-section massage table with wheeling system composed of 4 liftable casters with a central locking mechanism and 4 rubber feet.

* max. safe load when raising-lowering the table

Theraspace Z5.F4 | Massage table



MD





Box dimensions: **220 x 85 x 80 cm** Weight: **+50 kg**

Length: **205 cm**

Height: **49-95 cm**

Width: **67 cm**

Weight: **110 kg**

Load*: **200 kg**

Features:

- 5-section massage table.
- The ability to adjust the armrest with one hand - **SmartS4Arms**.
- High-quality, soft and pleasant to the touch polyurethane upholstery.
- Two-layer padding (3 cm foam 90 kg/cm^3 + 1 cm foam 43 kg/cm^3).
- Stitched upholstery.
- Round breathing hole in head section with 2 types of plugs (crescent, round).
- Adjusting the angle of the head section with a gas spring (from -65 to 30°).
- Middle section adjustment angle: -20° (Pivot adjustment).
- Head + middle section adjustment angle: +80°.
- Leg section adjustment angle: +8°.
- Total length of the table 205 cm.
- Maximum safe load of the table when raising-lowering the table ≤ 200 kg.
- Maximum safe working load of the table ≤ 275 kg.
- Safe electric actuator against crushing.
- High/low height adjustment foot bar (49-95 cm).
- F4 wheel system consisting of 4 liftable casters with a central locking mechanism and 4 rubber feet.
- A frame combining wood and steel.
- Wireless remote control with three programmable positions (option).
- Electric adjustment of: head + middle, middle + leg sections via control switches.
- Protection against accidental start-up.
- Linak actuator.

Settings and dimensions:

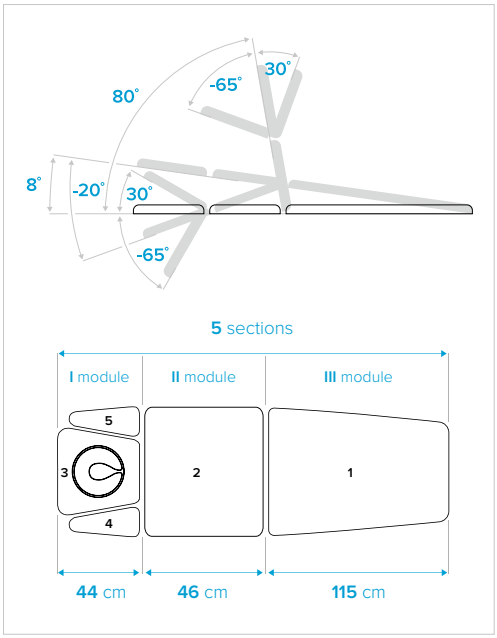

Additional accessories:

- Paper holder.
- Wedges.
- Bolsters, semi-bolsters.
- Stools for therapist.

Additional option:

- Wireless remote control.
- Built-in adjustable surface heating system.
- AutoLock.



Remote control



Stitched upholstery

Ordering information:

Z5.F4: 5-section massage table with wheeling system composed of 4 liftable casters with a central locking mechanism and 4 rubber feet.

* max. safe load when raising-lowering the table

Theraspace Z7.F4 | Massage table

MD







Box dimensions: **220 x 85 x 80 cm** Weight: **+50 kg**

Length: **205 cm**

Height: **49-95 cm**

Width: **67 cm**

Weight: **110 kg**

Load*: **200 kg**

Features:

- 7-section massage table.
- The ability to adjust the armrest with one hand - **SmartS4Arms**.
- Swiveling sides in the middle section.
- High-quality, soft and pleasant to the touch polyurethane upholstery.
- Two-layer padding (3 cm foam 90 kg/cm^3 + 1 cm foam 43 kg/cm^3).
- Stitched upholstery.
- Round breathing hole in head section with 2 types of plugs (crescent, round).
- Adjusting the angle of the head section with a gas spring (from -65 to 30°).
- Middle section adjustment angle: -20° (Pivot adjustment).
- Head + middle section adjustment angle: +80°.
- Leg section adjustment angle: +8°.
- Total length of the table 205 cm.
- Maximum safe load of the table when raising-lowering the table ≤ 200 kg.
- Maximum safe working load of the table ≤ 275 kg.
- Safe electric actuator against crushing.
- High/low height adjustment foot bar (49-95 cm).
- F4 wheel system consisting of 4 liftable casters with a central locking mechanism and 4 rubber feet.
- A frame combining wood and steel.
- Wireless remote control with three programmable positions (option).
- Electric adjustment of: head + middle, middle + leg sections via control switches.
- Protection against accidental start-up.
- Linak actuator.

Settings and dimensions:

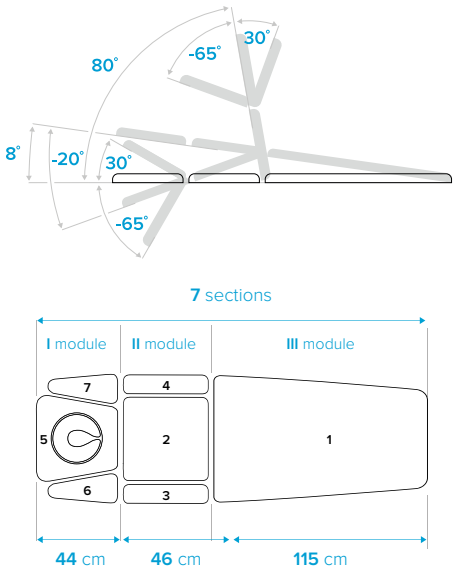

Additional accessories:

- Paper holder.
- Wedges.
- Bolsters, semi-bolsters.
- Stools for therapist.

Additional option:

- Wireless remote control.
- Built-in adjustable surface heating system.
- AutoLock.



Remote control



Stitched upholstery

Ordering information:

Z7.F4: 7-section massage table with wheeling system composed of 4 liftable casters with a central locking mechanism and 4 rubber feet.

* max. safe load when raising-lowering the table

Theraspace X4.F4 | Massage table



MD





Box dimensions: **220 x 85 x 80 cm** Weight: **+50 kg**

Length: **205 cm**

Height: **49-95 cm**

Width: **67 cm**

Weight: **110 kg**

Load:* **200 kg**

Features:

- 4-section massage table.
- High-quality, soft and pleasant to the touch polyurethane upholstery.
- Two-layer padding (3 cm foam 90 kg/cm^3 + 1 cm foam 43 kg/cm^3).
- Stitched upholstery.
- Round breathing hole in head section with 2 types of plugs (crescent, round).
- Adjusting the angle of the head section with a gas spring (from -65 to 30°).
- Head + backrest section adjustment angle: +80°.
- Seat section adjustment angle: +20°.
- Leg section adjustment angle: -10°/+45°.
- Total length of the table 205 cm.
- Maximum safe load of the table when raising-lowering the table ≤ 200 kg.
- Maximum safe working load of the table ≤ 275 kg.
- Safe electric actuator against crushing.
- F4 wheel system consisting of 4 liftable casters with a central locking mechanism and 4 rubber feet.
- High/low height adjustment foot bar (49-95 cm).
- A frame combining wood and steel.
- Wireless remote control with three programmable positions (option).
- Electric adjustment of: head + backrest, seat + leg sections via control switches.
- Protection against accidental start-up.
- Linak actuator.

Settings and dimensions:

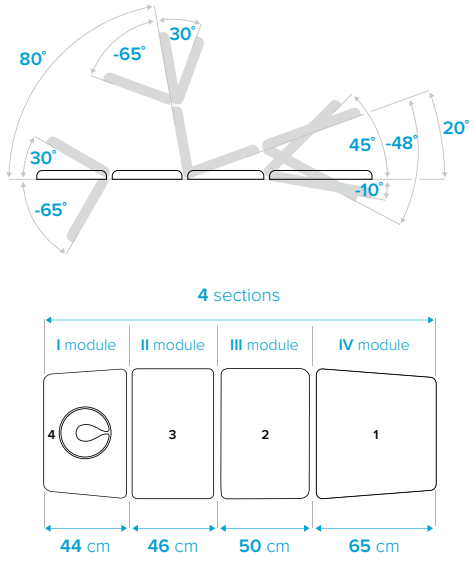

Additional accessories:

- Paper holder.
- Wedges.
- Bolsters, semi-bolsters.
- Stools for therapist.

Additional option:

- Wireless remote control.
- Built-in adjustable surface heating system.
- AutoLock.



Remote control



Stitched upholstery

Ordering information:

X4.F4: 4-section massage table with wheeling system composed of 4 liftable casters with a central locking mechanism and 4 rubber feet.

* max. safe load when raising-lowering the table

Theraspace X6.F4 | Massage table

MD







Box dimensions: **220 x 85 x 80 cm** Weight: **+50 kg**

Length: **205 cm**

Height: **49-95 cm**

Width: **67 cm**

Weight: **110 kg**

Load*: **200 kg**

Features:

- 6-section massage table.
- The ability to adjust the armrest with one hand - **SmartS4Arms**.
- High-quality, soft and pleasant to the touch polyurethane upholstery.
- Two-layer padding (3 cm foam 90 kg/cm^3 + 1 cm foam 43 kg/cm^3).
- Stitched upholstery.
- Round breathing hole in head section with 2 types of plugs (crescent, round).
- Adjusting the angle of the head section with a gas spring (from -65 to 30°).
- Head + backrest section adjustment angle: +80°.
- Seat section adjustment angle: +20°.
- Leg section adjustment angle: -10°/+45°.
- Total length of the table 205 cm.
- Maximum safe load of the table when raising-lowering the table ≤ 200 kg.
- Maximum safe working load of the table ≤ 275 kg.
- Safe electric actuator against crushing.
- F4 wheel system consisting of 4 liftable casters with a central locking mechanism and 4 rubber feet.
- High/low height adjustment foot bar (49-95 cm).
- A frame combining wood and steel.
- Wireless remote control with three programmable positions (option).
- Electric adjustment of: head + backrest, seat + leg sections via control switches.
- Protection against accidental start-up.
- Linak actuator.

Settings and dimensions:

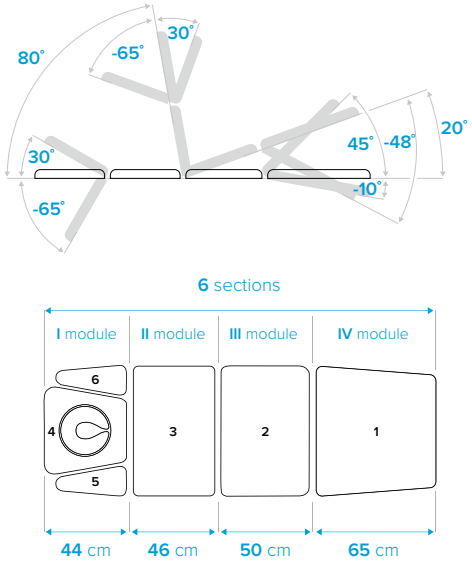

Additional accessories:

- Paper holder.
- Wedges.
- Bolsters, semi-bolsters.
- Stools for therapist.

Additional option:

- Wireless remote control.
- Built-in adjustable surface heating system.
- AutoLock.



Remote control



Stitched upholstery

Ordering information:

X6.F4: 6-section massage table with wheeling system composed of 4 liftable casters with a central locking mechanism and 4 rubber feet.

* max. safe load when raising-lowering the table

Theraspace X8.F4 | Massage table



MD





Box dimensions: **220 x 85 x 80 cm** Weight: **+50 kg**

Length: **205 cm**

Height: **49-95 cm**

Width: **67 cm**

Weight: **110 kg**

Load*: **200 kg**

Features:

- 8-section massage table.
- The ability to adjust the armrests with one hand - **SmartS4Arms**.
- Swiveling sides in the backrest section.
- High-quality, soft and pleasant to the touch polyurethane upholstery.
- Two-layer padding (3 cm foam 90 kg/cm^3 + 1 cm foam 43 kg/cm^3).
- Stitched upholstery.
- Round breathing hole in head section with 2 types of plugs (crescent, round).
- Adjusting the angle of the head section with a gas spring (from -65 to 30°).
- Head + backrest section adjustment angle: +80°.
- Seat section adjustment angle: +20°.
- Leg section adjustment angle: -10°/+45°.
- Total length of the table 205 cm.
- Maximum safe load of the table when raising-lowering the table ≤ 200 kg.
- Maximum safe working load of the table ≤ 275 kg.
- Safe electric actuator against crushing.
- F4 wheel system consisting of 4 liftable casters with a central locking mechanism and 4 rubber feet.
- High/low height adjustment foot bar (49-95 cm).
- A frame combining wood and steel.
- Wireless remote control with three programmable positions (option).
- Electric adjustment of: head + backrest, seat + leg sections via control switches.
- Protection against accidental start-up.
- Linak actuator.

Settings and dimensions:

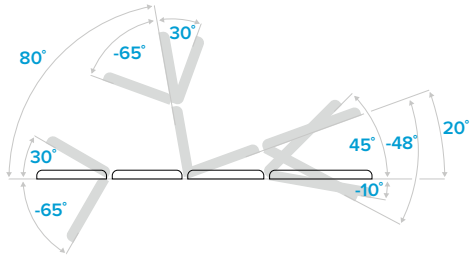

8 sections

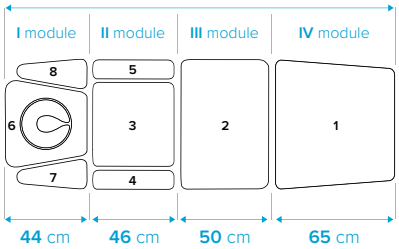

Additional accessories:

- Paper holder.
- Wedges.
- Bolsters, semi-bolsters.
- Stools for therapist.

Additional option:

- Wireless remote control.
- Built-in adjustable surface heating system.
- AutoLock.



Remote control



Stitched upholstery

Ordering information:

X8.F4: 8-section massage table with wheeling system composed of 4 liftable casters with a central locking mechanism and 4 rubber feet.

* max. safe load when raising-lowering the table

Theraspace
Line








Technical data:	E-S2	M-S2	M-S4	Z3	Z5	Z7	X4	X6	X8
Dimensions (length x width) [cm]:	202 x 69	203 x 69	203 x 69	205 x 67	205 x 67	205 x 67	205 x 67	205 x 67	205 x 67
Number of sections:	2	2	4	3	5	7	4	6	8
Head section adjustment angle [°]:	-20/+85	-70/+40	-70/+40	-65/+30	-65/+30	-65/+30	-65/+30	-65/+30	-65/+30
Middle section adjustment angle [°]:	-	-	-	-20	-20	-20	-	-	-
Head + middle s. adjustment angle [°]:	-	-	-	+80	+80	+80	-	-	-
Head + backrest s. adjustment angle [°]:	-	-	-	-	-	-	+80	+80	+80
Seat section adjustment angle [°]:	-	-	-	-	-	-	+20	+20	+20
Leg section adjustment angle [°]:	-	-	-	+8	+8	+8	-10/+45	-10/+45	-10/+45
Height adjustment [cm]:	47-95	47-95	47-95	49-95	49-95	49-95	49-95	49-95	49-95
Weight [kg]:	115	115	115	110	110	110	110	110	110
Max. lifting capacity [kg]:	200	200	200	200	200	200	200	200	200
Power supply [V/Hz]:	100-240/50-60	100-240/50-60	100-240/50-60	100-240/50-60	100-240/50-60	100-240/50-60	100-240/50-60	100-240/50-60	100-240/50-60
Max. working load [kg]:	275	275	275	275	275	275	275	275	275

Upholstery LUX:

Surface composition: 100% Polyurethane

Backing composition: 100% Polyester

OM006 white | OM240 beige | OM315 sky | OM221 blue | OM314 cement | OM076 olive grey | OM173 dark brown | OM225 black | OM469 lima | OM157 forest | OM053 red | OM217 bordeaux | OM075 orange | OM095 mostaza

Durability performance
>500 000 cycles (heavy use)

Resistance to hydrolisis

High scratch resistance

Chemical solvents-free

REACH compliant

Types of wheeling system:

F0

F0 system composed of 2 legs with rubber feet and 2 small wheels for moving of Safari Table by lifting it from one side.
The system is recommended for users who relocate their Safari Table less frequently.

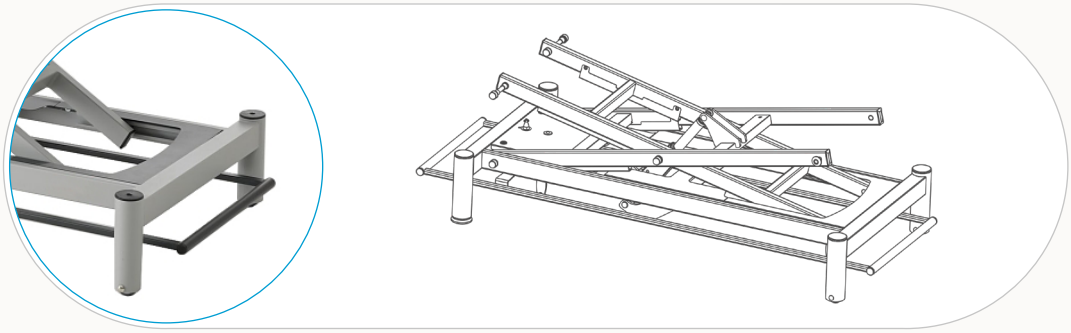

Massage tables
Safari

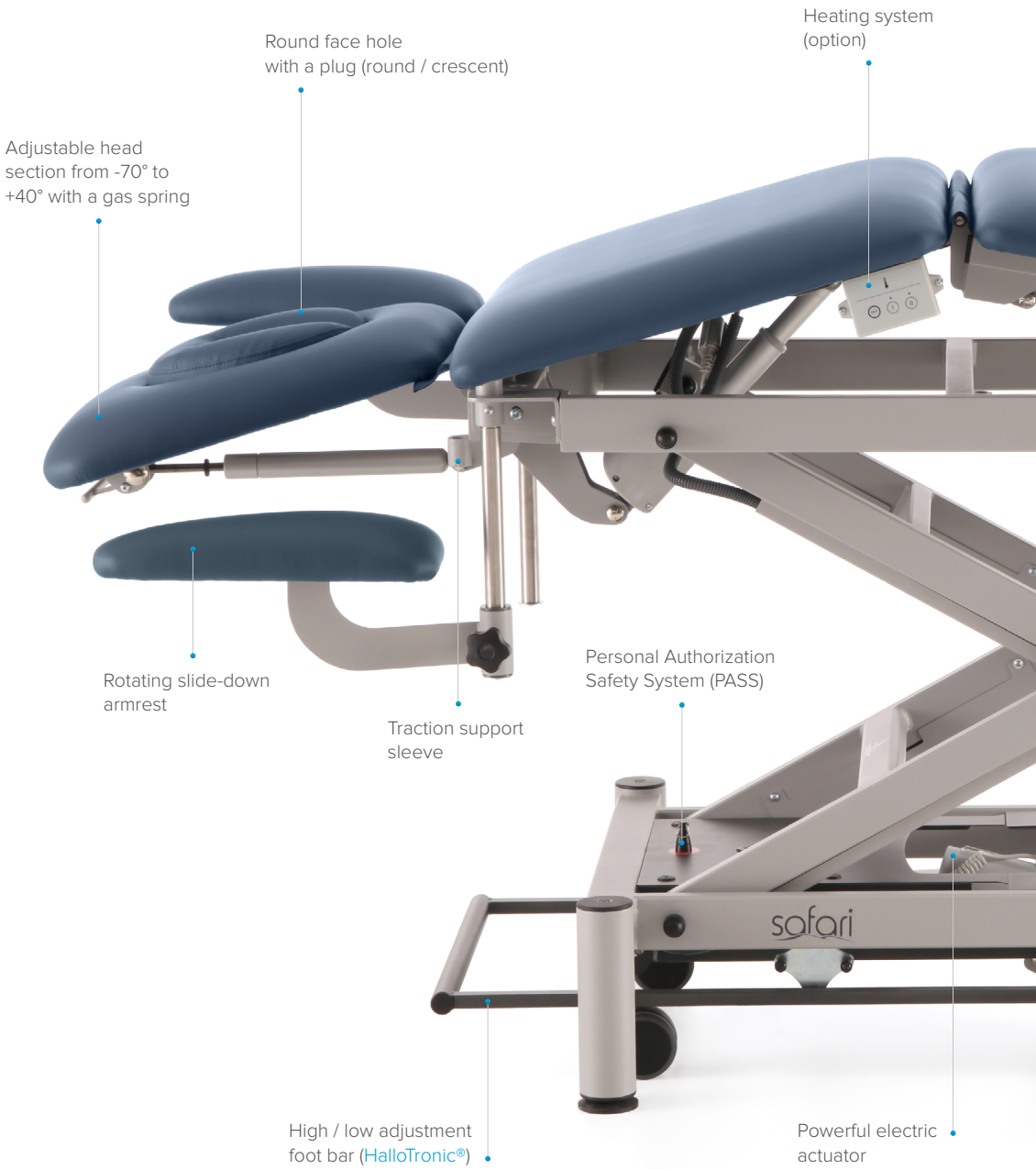

AUTO LOCK

AutoLock option

ensures protection against accidental changes in table position.
Not applicable to -H versions.

F4

The system, composed of four directional castors (Ø75 mm) with a central brake, allows for quick and effortless relocation of the Safari Table, with or without a patient.

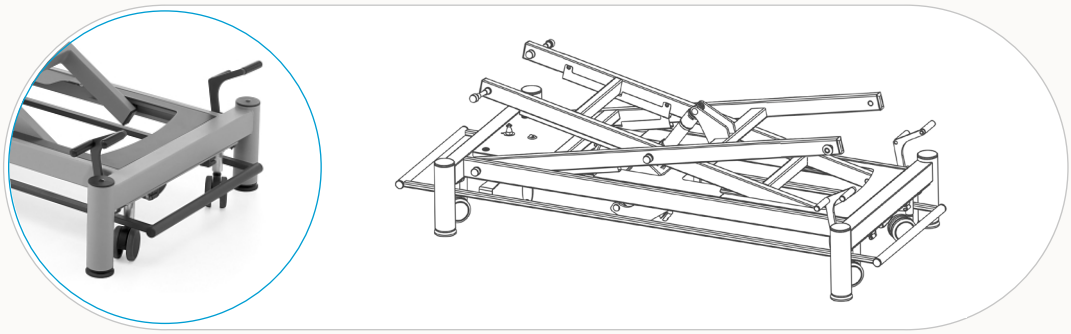

2 side brackets for fixation of stabilization belts and elastic bands

Two-layer padding with upholstery in many colours*

Foot - operated lever of F4 system

Rubber foot with 1 cm height adjustment

The transition to LUX upholstery as the standard upholstery is currently in progress. Once completed, the current standard upholstery will be phased out.

Safari
Puma S2.F0/S2.F4

Massage table

MD





Box dimensions: **220 x 85 x 75 cm** Weight: **+50 kg**

Length: **202 cm**

Height: **52-93 cm**

Width: **69 cm**

Weight: **86/99 kg**

Max load*: **200 kg**

Features:

- 2-section massage table.
- Width of table top: 69 cm.
- Adjustable head section from -70° to +40° with a gas spring.
- Round face hole in the head section with a removable face hole cover which increases patient's comfort (2 types of cover: round and crescent).
- Two-layer padding with upholstery in many colours.
- Powder coated, stable scissor steel frame.
- 2 side brackets for the fixation of stabilization belts and elastic bands
- Traction support sleeves.
- Personal Authorization Safety System with 2 magnetic safety keys.
- HalloTronic® System electric high/low height adjustment from 52 to 93 cm with a lifting capacity up to 200 kg.
- Powder coated steel high/low height adjustment foot bar accessible from each side of the table.
- Rubber feet with 1 cm height adjustment allowing for the levelling of the table.
- Two ways of frame painting: ,,white" or ,,twintone".

Settings and dimensions:

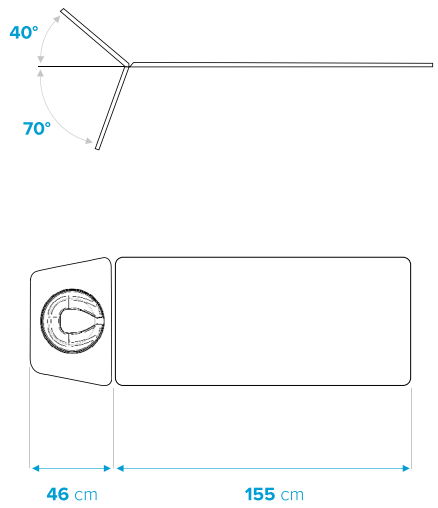

Additional option:

- Built-in surface heating system of table top.
- Upholstery of 80 mm thickness.
- Upholstery of 80 cm width.
- LUX upholstery (PU).
- AutoLock.

Additional accessories:

- Paper holder.
- Wedges.
- Bolsters, semi-bolsters.
- Traction supports.
- Stabilization belts.
- Stools for therapist.

Ordering information:

S2.F0: 2-section massage table with wheeling system composed of 2 small wheels and 2 legs with rubber feet.

S2.F4: 2-section massage table with dual-lever retractable castor wheeling system composed of 4 directional castors with central brake and 4 legs with rubber feet.

* max. lifting capacity

Safari
Puma S4.F0/S4.F4

Massage table

MD





Box dimensions: **220 x 85 x 75 cm** Weight: **+50 kg**

Length: **202 cm**

Height: **52-93 cm**

Width: **69 cm**

Weight: **89/102 kg**

Max load*: **200 kg**

Features:

- 4-section massage table.
- Width of table top: 69 cm.
- Adjustable head section from -70° to +40° with a gas spring.
- Round face hole in the head section with a removable face hole cover which increases patient's comfort (2 types of cover: round and crescent).
- Rotating slide-down armrest in head section.
- Two-layer padding with upholstery in many colours.
- Powder coated, very stable scissor steel frame.
- 2 side brackets for the fixation of stabilization belts and elastic bands.
- Traction support sleeves.
- Personal Authorization Safety System with 2 magnetic safety keys.
- HalloTronic® System electric high/low height adjustment from 52 to 93 cm with a lifting capacity up to 200 kg.
- Powder coated steel high/low height adjustment foot bar accessible from each side of the table.
- Rubber feet with 1 cm height adjustment allowing for the levelling of the table.
- Two ways of frame painting: „white" or „twintone".

Settings and dimensions:

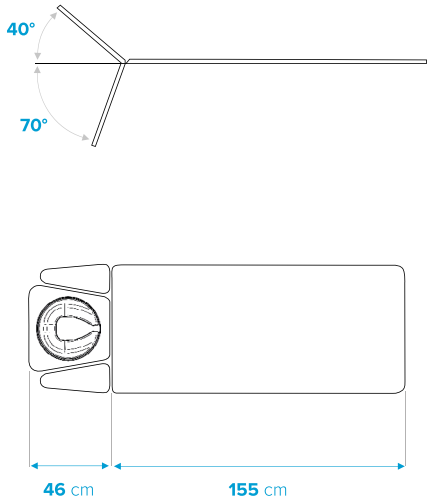

Additional option:

- Built-in surface heating system of table top.
- Upholstery of 80 mm thickness.
- Upholstery of 80 cm width.
- LUX upholstery (PU).
- AutoLock.

Additional accessories:

- Paper holder.
- Wedges.
- Bolsters, semi-bolsters.
- Traction supports.
- Stabilization belts.
- Stools for therapist.

Ordering information:

S4.F0: 4-section massage table with wheeling system composed of 2 small wheels and 2 legs with rubber feet.

S4.F4: 4-section massage table with dual-lever retractable castor wheeling system composed of 4 directional castors with central brake and 4 legs with rubber feet.

* max. lifting capacity

Safari
Puma E-S2.F0/E-S2.F4

Massage table

MD







2 ways of frame painting

Box dimensions: **220 x 85 x 75 cm** Weight: **+50 kg**

Length: **208 cm**

Height: **52-93 cm**

Width: **69 cm**

Weight: **88/103 kg**

Max load*: **200 kg**

Features:

- 2-section massage table with a long head section.
- Width of table top: 69 cm.
- Adjustable long head section from -20° to +85° or 0° to +85° (with special frame) with 2 gas springs.
- Round face hole in the head section with a removable face hole cover (2 types: round and crescent).
- Two-layer padding with upholstery in many colours.
- Powder coated, very stable steel frame.
- 2 side brackets for the fixation of stabilization belts and elastic bands.
- Personal Authorization Safety System with 2 safety magnetic keys.
- HalloTronic® System for electric high/low height adjustment from 52 to 93 cm with a lifting capacity up to 200 kg.
- Powder coated steel high/low height adjustment foot bar accessible from each side of the table.
- Rubber feet with 1 cm height adjustment allowing for the levelling of the table.
- Two ways of frame painting: „white" or „twintone".

Settings and dimensions:

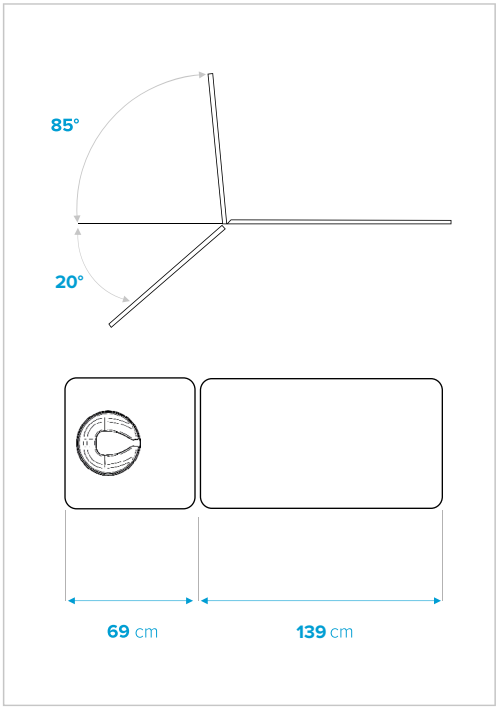

Additional option:

- Upholstery of 80 mm thickness.
- Upholstery of 80 cm width.
- Built-in adjustable heating system.
- LUX upholstery (PU).
- AutoLock.

Additional accessories:

- Paper holder.
- Wedges.
- Bolsters, semi-bolsters.
- Traction supports.
- Stabilization belts.
- Stools for therapist.
- Folding barriers.

Ordering information:

E-S2.F0: 2-section massage table with wheeling system composed of 2 small wheels and 2 legs with rubber feet.

E-S2.F4: 2-section massage table with dual-lever retractable castor wheeling system composed of 4 directional castors with central brake and 4 legs with rubber feet.

* max. lifting capacity

Safari
Leopard S3.F0/S3.F4

Massage table



MD





2 ways of frame painting

Box dimensions: **220 x 85 x 75 cm** Weight: **+50 kg**

Length: **205 cm**

Height: **52-93 cm**

Width: **69 cm**

Weight: **93/106 kg**

Max load*: **200 kg**

Features:

- 3-section massage table.
- Width of table top: 69 cm.
- Adjustable head section from -70° to +40° with a gas spring.
- Round face hole in the head section with a removable face hole cover which increases patient's comfort (2 types of cover: round and crescent).
- Adjustable leg section from 0° to 90° with a gas spring.
- Two-layer padding with upholstery in many colours.
- Powder coated, very stable scissor steel frame.
- 2 side brackets for the fixation of stabilization belts and elastic bands.
- Traction support sleeves.
- Personal Authorization Safety System with 2 magnetic safety keys.
- HalloTronic® System electric high/low height adjustment from 52 to 93 cm with a lifting capacity up to 200 kg.
- Powder coated steel high/low height adjustment foot bar accessible from each side of the table.
- Rubber feet with 1 cm height adjustment allowing for the levelling of the table.
- Two ways of frame painting: „white" or „twintone".

Settings and dimensions:

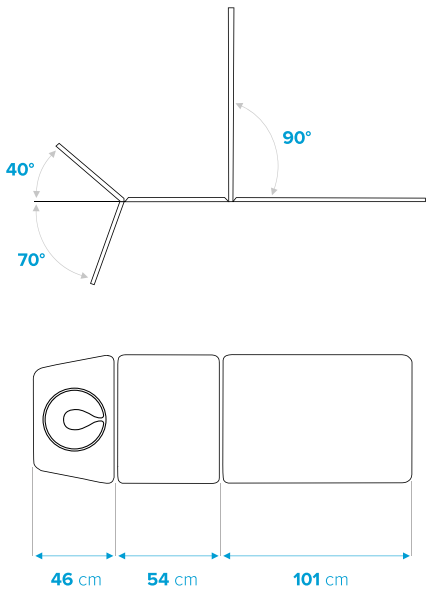

Additional option:

- Built-in surface heating system of table top.
- Upholstery of 80 mm thickness.
- Upholstery of 80 cm width.
- LUX upholstery (PU).
- AutoLock.

Additional accessories:

- Paper holder.
- Wedges.
- Bolsters, semi-bolsters.
- Traction supports.
- Stabilization belts.
- Stools for therapist.

Ordering information:

S3.F0: 3-section massage table with wheeling system composed of 2 small wheels and 2 legs with rubber feet.

S3.F4: 3-section massage table with dual-lever retractable castor wheeling system composed of 4 directional castors with central brake and 4 legs with rubber feet.

* max. lifting capacity

Safari
Leopard S5.F0/S5.F4

Massage table



MD





2 ways of frame painting

Box dimensions: **220 x 85 x 75 cm** Weight: **+50 kg**

Length: **205 cm**

Height: **52-93 cm**

Width: **69 cm**

Weight: **96/109 kg**

Max load*: **200 kg**

Features:

- 5-section massage table.
- Width of table top: 69 cm.
- Adjustable head section from -70° to +40° with a gas spring.
- Round face hole in the head section with a removable face hole cover which increases patient's comfort (2 types of cover: round and crescent).
- Rotating slide-down armrests.
- Adjustable leg section from 0° to 90° with a gas spring.
- Two-layer padding with upholstery in many colours.
- Powder coated, very stable scissor steel frame.
- 2 side brackets for the fixation of stabilization belts and elastic bands.
- Traction support sleeves.
- Personal Authorization Safety System with 2 magnetic safety keys.
- HalloTronic® System electric high/low height adjustment from 52 to 93 cm with a lifting capacity up to 200 kg.
- Powder coated steel high/low height adjustment foot bar accessible from each side of the table.
- Rubber feet with 1 cm height adjustment allowing for the levelling of the table.
- Two ways of frame painting: „white" or „twintone".

Settings and dimensions:

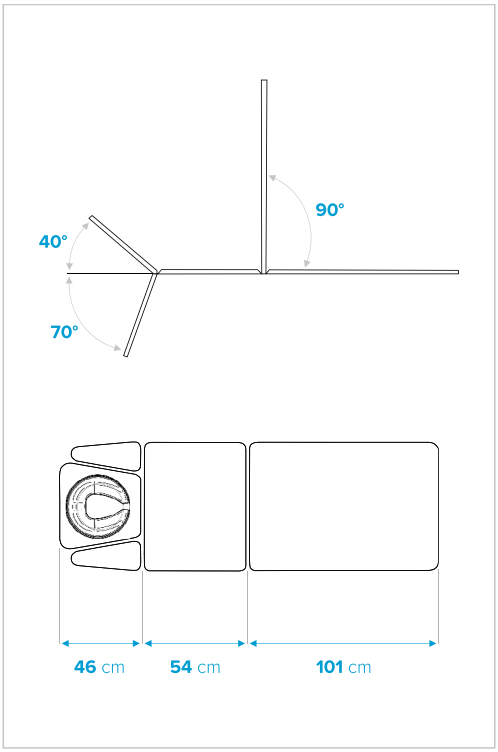

Additional option:

- Built-in surface heating system of table top.
- Upholstery of 80 mm thickness.
- Upholstery of 80 cm width.
- LUX upholstery (PU).
- AutoLock.

Additional accessories:

- Paper holder.
- Wedges.
- Bolsters, semi-bolsters.
- Traction supports.
- Stabilization belts.
- Stools for therapist.

Ordering information:

S5.F0: 5-section massage table with wheeling system composed of 2 small wheels and 2 legs with rubber feet.

S5.F4: 5-section massage table with dual-lever retractable castor wheeling system composed of 4 directional castors with central brake and 4 legs with rubber feet.

* max. lifting capacity

Safari
Jaguar P3.F0/P3.F4

Massage table



MD





2 ways of frame painting

Box dimensions: **220 x 85 x 75 cm** Weight: **+50 kg**

Length: **205 cm**

Height: **54-95 cm**

Width: **69 cm**

Weight: **99/112 kg**

Max load*: **200 kg**

Features:

- 3-section massage table with postural drainage setting.
- Postural drainage with an electric actuator operated by 2 switches from both sides of the table.
- Width of table top: 69 cm.
- Adjustable head section from -70° to +40° with a gas spring.
- Round face hole in the head section with a removable face hole cover which increases patient's comfort (2 types of cover: round and crescent).
- Adjustable leg section from 0° to 90° with gas spring.
- Two-layer padding with upholstery in many colours.
- Powder coated, very stable scissor steel frame.
- 2 side brackets for the fixation of stabilization belts and elastic bands.
- Traction support sleeves.
- Personal Authorization Safety System with 2 magnetic safety keys.
- HalloTronic® System electric high/low height adjustment from 54 to 95 cm with a lifting capacity up to 200 kg.
- Powder coated steel high/low height adjustment foot bar accessible from each side of the table.
- Rubber feet with 1 cm height adjustment allowing for the levelling of the table.
- Two ways of frame painting: „white" or „twintone".

Table articulations:

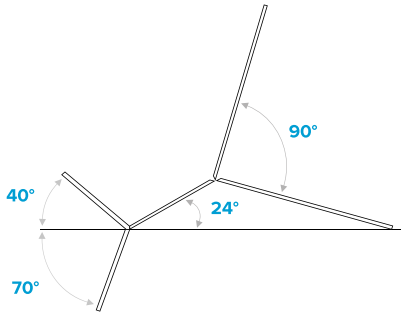

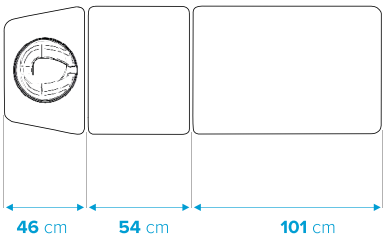

Additional option:

- Built-in surface heating system of table top.
- Upholstery of 80 mm thickness.
- Upholstery of 80 cm width.
- LUX upholstery (PU).
- AutoLock.

Additional accessories:

- Paper holder.
- Wedges.
- Bolsters, semi-bolsters.
- Traction supports.
- Stabilization belts.
- Stools for therapist.

Ordering information:

P3.F0: 3-section massage table with wheeling system composed of 2 small wheels and 2 legs with rubber feet.

P3.F4: 3-section massage table with dual-lever retractable castor wheeling system composed of 4 directional castors with central brake and 4 legs with rubber feet.

* max. lifting capacity

Safari
Jaguar P5.F0/P5.F4

Massage table

MD







2 ways of frame painting

Box dimensions: **220 x 85 x 75 cm** Weight: **+50 kg**

Length: **205 cm**

Height: **54-95 cm**

Width: **69 cm**

Weight: **102/115 kg**

Max load*: **200 kg**

Features:

- 5-section massage table with the postural drainage setting.
- Postural drainage with an electric actuator operated by 2 switches from both sides of the table.
- Width of table top: 69 cm.
- Adjustable head section from -70° to +40° with a gas spring.
- Round face hole in the head section with a removable face hole cover which increases patient's comfort (2 types of cover: round and crescent).
- Rotating slide-down armrests.
- Adjustable leg section from 0° to 90° with a gas spring.
- Two-layer padding with upholstery in many colours.
- Powder coated, very stable scissor steel frame.
- 2 side brackets for the fixation of stabilization belts and elastic bands.
- Traction support sleeves.
- Personal Authorization Safety System with 2 safety magnetic keys.
- HalloTronic® System electric high/low height adjustment from 54 to 95 cm with a lifting capacity up to 200 kg.
- Powder coated steel high/low height adjustment foot bar accessible from each side of the table.
- Rubber feet with 1 cm height adjustment allowing for the levelling of the table.
- Two ways of frame painting: ,,white" or ,,twintone".

Table articulations:

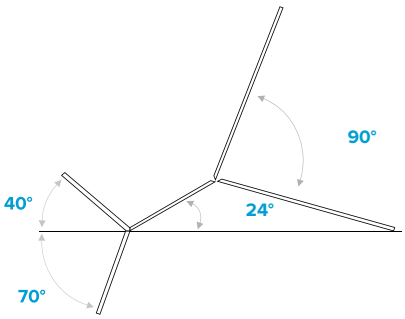

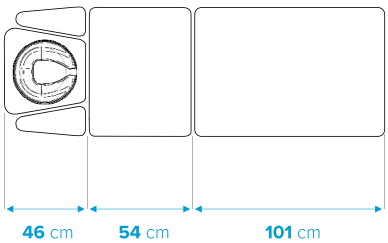

Additional option:

- Built-in surface heating system of table top.
- Upholstery of 80 mm thickness.
- Upholstery of 80 cm width.
- LUX upholstery (PU).
- AutoLock.

Additional accessories:

- Paper holder.
- Wedges.
- Bolsters, semi-bolsters.
- Traction supports.
- Stabilization belts.
- Stools for therapist.

Ordering information:

P5.F0: 5-section massage table with wheeling system composed of 2 small wheels and 2 legs with rubber feet.

P5.F4: 5-section massage table with dual-lever retractable castor wheeling system composed of 4 directional castors with central brake and 4 legs with rubber feet.

* max. lifting capacity

Safari
Line



Technical data:	Puma S2	Puma E-S2 -	Puma S4	Leopard S3	Leopard S5	Jaguar P3	Jaguar P5
Dimensions (length x width) [cm]:	202 x 69	208 x 69	202 x 69	205 x 69	205 x 69	205 x 69	205 x 69
Number of sections:	2	2	4	3	5	3	5
Head section inclination angle [°]:	-70/+40	-20/+85	-70/+40	-70/+40	-70/+40	-70/+40	-70/+40
Middle section inclination angle [°]:	-	-	-	-	--	0/+24	0/+24
Leg section inclination angle [°]:	-	-	-	0/+90	0/+90	0/+90	0/+90
Height adjustment [cm]:	52-93	52-93	52-93	52-93	52-93	54-95	54-95
Weight F0/F4 [kg]:	86/99	88/103	89/102	93/106	96/109	99/112	102/115
Max. lifting capacity [kg]:	200	200	200	200	200	200	200
Power supply [V/Hz]:	100-240/50-60	100-240/50-60	100-240/50-60	100-240/50-60	100-240/50-60	100-240/50-60	100-240/50-60
Max. working load [kg]:	275	275	275	275	275	275	275



Adjustment of head rest



Adjustment of postural drainage

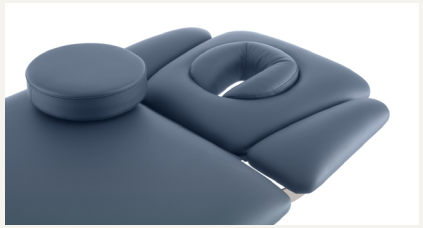

2 types of breathing slot cover: round and crescent



Built-in surface heating system of table top (option)



Personal Authorization Safety System (PASS)

Safari
Puma/Leopard/Jaguar

Massage table
Hydraulic



MD



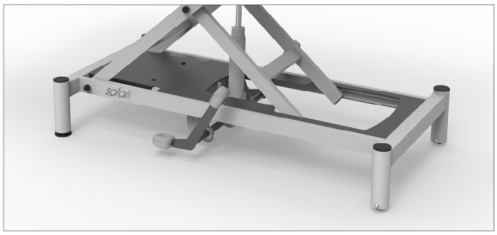

2 ways of frame painting

Box dimensions: **220 x 85 x 80 cm** Weight: **+50 kg**

Length: **202-208 cm**

Height: **52-99cm/ 54-101 cm**

Width: **69 cm**

Weight: **92-121 kg**

Max load*: **200 kg**

Features:

- 2-, 3-, 4- or 5-section massage table with a powerful hydraulic actuator.
- Postural drainage by the means of 2 levers accessible from 2 sides of table top (P3, P5 version).
- Rotating armrests in head section (S4, S5, P5 versions).
- Width of table top: 69 cm.
- Adjustable head section from -70° to +40° with a gas spring (-20° to 85° in E-S2 version (tables with long head section)).
- Round face hole in the head section with a removable face hole cover which increases patient's comfort (2 types of cover: round and crescent).
- Adjustable leg section from 0° to 90° with a gas spring.
- Two-layer padding with upholstery in many colours.
- Powder coated, very stable scissor steel frame.
- 2 side brackets for the fixation of stabilization belts and elastic bands.
- Traction support sleeves.
- Hydraulic high/low height adjustment with a lifting capacity up to 200 kg.
- High/low height adjustment with foot pedal accessible from both sides of the table.
- Two ways of frame painting: „white" or „twintone".

Frame F0-H:

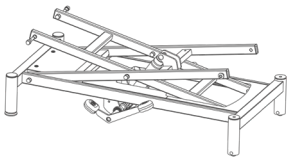

Frame F4-H:

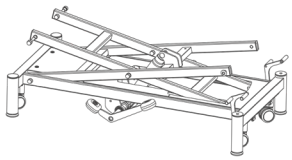

Additional option:

- Upholstery of 80 mm thickness.
- Upholstery of 80 cm width.
- LUX upholstery (PU).

Technical data:

	Puma S2	Puma E-S2	Puma S4	Leopard S3	Leopard S5	Jaguar P3	Jaguar P5
Dimensions (length x width) [cm]:	202 x 69	208 x 69	202 x 69	205 x 69	205 x 69	205 x 69	205 x 69
Number of sections:	2	2	4	3	5	3	5
Head section inclination angle [°]:	-70/+40	-20/+85	-70/+40	-70/+40	-70/+40	-70/+40	-70/+40
Middle section inclination angle [°]:	-	-	-	-	-	0/+24	0/+24
Leg section inclination angle [°]:	-	-	-	0/+90	0/+90	0/+90	0/+90
Height adjustment [cm]:	52-99	52-99	52-99	52-99	52-99	54-101	54-101
Weight F0/F4 [kg]:	92/105	96/109	95/108	99/112	102/115	105/118	108/121
Max. lifting capacity [kg]:	200	200	200	200	200	200	200
Ordering information:	**S2.F0-H** **S2.F4-H**	**E-S2.F0-H** **E-S2.F4-H**	**S4.F0-H** **S4.F4-H**	**S3.F0-H** **S3.F4-H**	**S5.F0-H** **S5.F4-H**	**P3.F0-H** **P3.F4-H**	**P5.F0-H** **P5.F4-H**

* max. lifting capacity

WaveMotion Ellipse | Massage table



Box dimensions: **220 x 95 x 95 cm** Weight: **+50 kg**



Massage table **WaveMotion Ellipse** - gentle swing and rotation 360° in space. This massage table is designed for performing manual massage treatments to treat and alleviate traumas or disabilities by restoring or improving the function of massaged tissues, organs, and systems. It enables the patient to take the correct position for massage treatment and to adjust height and/or position of the table sections.
Manual massage treatments using this table has a positive efect on i.a.:

- muscular tension disorders,
- spinal disc disorder,
- chronic back, low back pain,
- cystic fibrosis,
- pain in the quadriceps fatigue,
- tension-type headache,
- osteoarthritis of the hip joints.

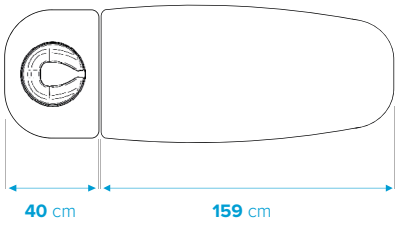

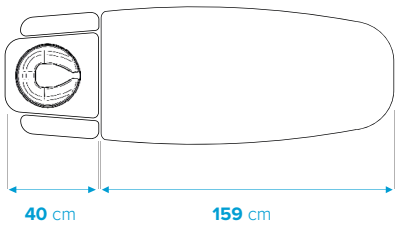

Features:

- Versions depended on the therapist needs: 2 - or 4 - sections, upholstery padding of 4 or 8 cm thickness, width 75 cm or 80 cm (option).
- Easily adjustable sections: head section - via gas spring, arm rests – via rotating mechanism.
- Table top movement (360° rotation on a floating suspension and can be tilt both axes).
- Patient comfort: round face hole with a matching cushion.
- Two-layer padding (specially selected density of foams), with upholstery in many colours*.
- Stable steel frame.
- Personal Authorization Safety System (option).
- Electric height adjustment via foot controller.

Technical data:

	S2	S4
Dimensions (L x W) [cm]:	202 x 75	202 x 75
Section number:	2	4
Fold-down armrests:	-	+
Head section adjustment:	+	+
Height adjustment [cm]:	65-105	65-105
Max. weight [kg]:	145	145
Max. lifting cpacity [kg]:	150	150
Power supply [V/Hz]:	230/50/60	230/50/60

Models available:

- **S2:** 2-section with adjustable head section,
- **S4:** 4-section with adjustable head section and fold-down armrests.

S2, S4 models: the 40°/90° headrest allows for an ergonomic positioning in the prone position, but the head of patient/client can be gently supported in the supine position. The adjustment range of the headrest is from 40° positive to 90° negative. The headrest has a round face cradle with a matching cushion.

Additional options:

- LUX upholstery (PU).
- Built-in surface heating system of table top.
- Upholstery of 80 cm width.
- F2 lift (2 fixed wheels + 2 castors central lifted).
- Personal Authorization Safety System.
- Additional foot controller.

The transition to LUX upholstery as the standard upholstery is currently in progress. Once completed, the current standard upholstery will be phased out.

Types of height adjustment: electric, hydraulic



Nexus S3
with electric
height adjustment



Nexus S3-H
with hydraulic
height adjustment

Massage tables
Nexus



AUTO LOCK

AutoLock option

ensures protection against accidental changes in table position.
Not applicable to -H versions

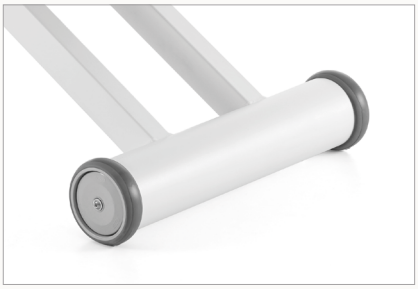

Big TENTE castors



LINAK® IRS™ actuator
for electric height adjustment (not applicable in H version).





Electric control options:



Hand remote control
for electric height adjustment (not applicable in H version) - additional function of three position memory.

or



Foot remote control
for electric height adjustment (not applicable in H version).

or



Hand controlled frame
for electric height adjustment (not applicable in H version).

Nexus | Massage table

The **NEXUS massage table** is designed for performing manual massage treatments to treat and alleviate traumas or disabilities by restoring or improving the function of massaged tissues, organs, and systems.

The clinical benefits of massage tables are based on the fact that it is possible for the patient to take the right position for the massage treatment and the possibility to adjust the height and/or individual sections of the table, which facilitates the work of the rehabilitator/physiotherapist and increases the comfort of the patient during the massage treatment.

The Nexus massage table can be used also for performing other rehabilitation treatments.

Structures:

MD NEXUS S2 / S2-H:



NEXUS S2



NEXUS S2-H

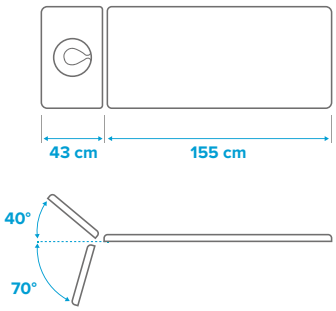

MD NEXUS S4 / S4-H:



NEXUS S4



NEXUS S4-H

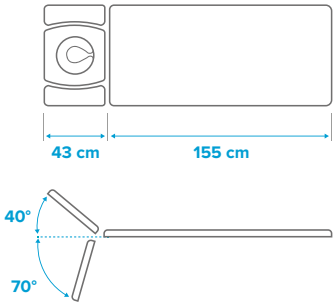

MD NEXUS E-S2 / E-S2-H:



NEXUS E-S2



NEXUS E-S2-H

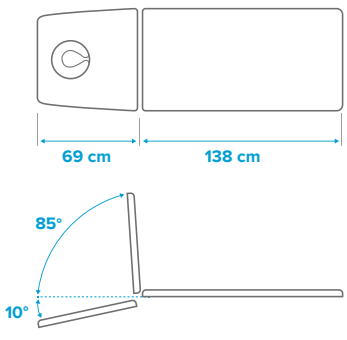

Nexus | Massage table

MD NEXUS S3 / S3-H:



NEXUS S3



NEXUS S3-H

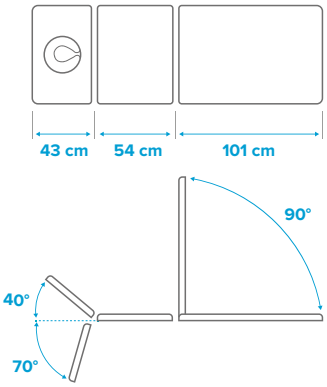

MD NEXUS S5 / S5-H:



NEXUS S5



NEXUS S5-H

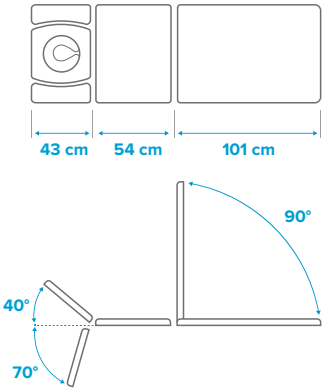

MD NEXUS P3 / P3-H:



NEXUS P3



NEXUS P3-H

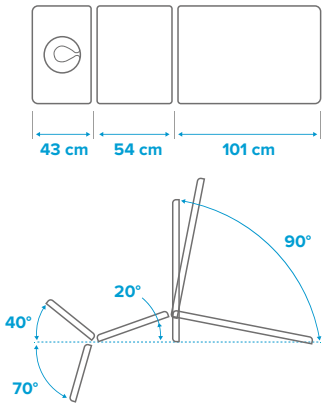

MD NEXUS P5 / P5-H:



NEXUS P5



NEXUS P5-H

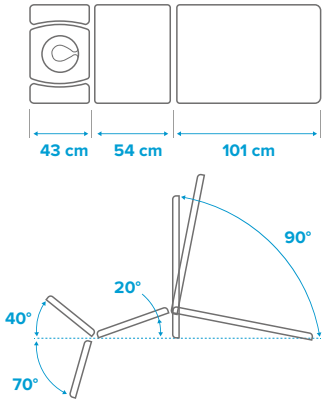

Nexus E-S2/S2/S3/S4/S5/P3/P5

Massage table

MD





Box dimensions: **220 x 85 x 75 cm** Weight: **+50 kg**

Width: **69 cm**

Weight: **85 kg**

Load*: **185 kg**

Length: **198 cm** (S2,S4), **205 cm** (S3,S5,P3,P5), **207 cm** (E-S2)

Height: **50-94 cm** (S2,E-S2,S3,S4,S5), **52,5-96,5 cm** (P3,P5)

Features:

- 2-, 3-, 4- or 5-section massage table.
- Postural drainage by the means of 2 levers accessible from 2 sides of the table top (P3/P5 only).
- 2-ply padding with LUX upholstery in a wide range of colours.
- Face hole with 2 plugs (crescent, round).
- Head and leg sections adjustable with gas springs.
- Electric height adjustment: 50-94 cm (52,5 – 96,5 cm in P3/P5) by foot remote control.
- Electric LINAK® IRS™ actuator; has a push function only, limiting the possibility of accidental crushing; it is possible to lift the top frame of the table freely.
- Equipped with an Automatic Control Lock function, which is activated 10 seconds after the last use of the control manipulators (hand remote control, hand controlled frame, etc.); to unlock it, the control manipulator must be used twice within a short period of time; the next use of the control manipulator, within a maximum of 10 seconds, activates the possibility of electrical control of the table.
- Stable scissor frame.
- Two options for the frame painting: White or Anthracite.
- Durable construction with maximum safe working load for height adjustment of up to 185 kg.
- Rotating slide-down armrest in head section (S4/S5/P5 only): 90° rotation, 18 cm of lowering range.
- Mobile - 2 transport castors.

Additional accessories:

- Paper holder.
- Wedges.
- Bolsters, semi-bolsters.
- 2 x side rails (not available if the table has already horizontal folding barriers).
- Stools for therapist.

Additional options:

- Hand remote control - instead of foot remote control**.
- Hand controlled frame - instead of foot remote control**.
- Built-in table top heating system.
- horizontal folding barriers (2 pcs) (E-S2/S2/ S3/S4/ S5 only).
- AutoLock.

Frame painting:

anthracite

white

Ordering information:

S2: 2-section massage table, electric height adjustment

E-S2: 2-section massage table with long head section, electric height adjustment

S3: 3-section massage table, electric height adjustment

S4: 4-section massage table, electric height adjustment, rotating slide-down armrest

S5: 5-section massage table, electric height adjustment, rotating slide-down armrest

P3: 3-section massage table, electric height adjustment, postural drainage

P5: 5-section massage table, electric height adjustment, rotating slide-down armrest, postural drainage

* max. safe load

** Important note: every table only be equipped with ONE of the electrical control options (foot remote control OR hand remote control OR hand controlled frame).

Nexus E-S2-H/S2-H/ S3-H/S4-H/S5-H/P3-H/P5-H

Massage table

MD





Box dimensions: **220 x 85 x 75 cm** Weight: **+50 kg**

Width: **69 cm**

Weight: **85 kg**

Load*: **185 kg**

Length: **198 cm** (S2-H,S4-H), **205 cm** (S3-H,S5-H,P3-H,P5-H), **207 cm** (E-S2-H)

Height: **50-94 cm** (S2-H,E-S2-H,S3-H,S4-H,S5-H), **52,5-98,5 cm** (P3-H,P5-H)

Features:

- 2-, 3-, 4- or 5-section massage table.
- Postural drainage by the means of 2 levers accessible from 2 sides of the table top (P3-H/P5-H only).
- Two-layer padding with LUX upholstery in a wide range of colours.
- Face hole with 2 plugs (crescent, round).
- Head and leg sections adjustable with gas springs.
- Hydraulic height adjustment: 50-94 cm (52,5 - 98,5 cm in P3-H/P5-H) by a lever.
- Hydraulic actuator.
- Hydraulic height adjustment has a push function only, limiting the possibility of accidental crushing; it is possible to lift the top frame of the table freely.
- Stable scissor frame.
- Two options for the frame painting: White or Anthracite.
- Durable construction with maximum safe working load for height adjustment of up to 185 kg.
- Rotating slide-down armrest in head section (S4-H/S5-H/P5-H only): 90° rotation, 18 cm of lowering range.
- Mobile - 2 transport castors.

Additional accessories:

- Paper holder.
- Wedges.
- Bolsters, semi-bolsters.
- 2 x side rails (not available if the table has already horizontal folding barriers).
- Stools for therapist.

Additional options:

- 2 x horizontal folding barriers (E-S2-H/S2-H/ S3-H/ S4-H/S5-H only).

Frame painting:

anthracite

white

Ordering information:

S2-H: 2-section massage table, hydraulic height adjustment

E-S2-H: 2-section massage table with long head section, hydraulic height adjustment

S3-H: 3-section massage table, hydraulic height adjustment

S4-H: 4-section massage table, hydraulic height adjustment, rotating slide-down armrest

S5-H: 5-section massage table, hydraulic height adjustment, rotating slide-down armrest

P3-H: 3-section massage table, hydraulic height adjustment, postural drainage

P5-H: 5-section massage table, hydraulic height adjustment, rotating slide-down armrest, postural drainage

* max. safe load

Accessories



Wedges (different sizes)

Semi-bolsters (different sizes)

Bolsters (different sizes)



Stools for therapists



Side rails

Paper holders for:

NEXUS S3, S3-H, S5, S5-H

type 4



NEXUS E-S2, E-S2-H, S2, S2-H, S4, S4-H

type 9



NEXUS P3, P3-H, P5, P5-H

type 14



LUX upholstery:

Surface composition: 100% Polyurethane

Backing composition: 100% Polyester

OM006 white	OM240 beige	OM315 sky	OM221 blue	OM314 cement	OM076 olive grey	OM173 dark brown
OM225 black	OM469 lima	OM157 forest	OM053 red	OM217 bordeaux	OM075 orange	OM095 mostaza

Additional options:



Heating system (el. versions)



Horizontal folding barriers

Technical data:

	S2/S2-H	E-S2/E-S2-H	S3/S3-H	S4/S4-H	S5/S5-H	P3/P3-H	P5/P5-H
Number of sections:	2	2	3	4	5	3	5
Dimensions (LxW) [cm]:	198 x 69	207 x 69	205 x 69	198 x 69	205 x 69	205x69	205x69
Head section inclination angle [°]:	-70/+40	-10/+85	-70/+40	-70/+40	-70/+40	-70/+40	-70/+40
Armrest rotation [°]:	-	-	-	90	90	-	90
Armrest lowering range [°]:	-	-	-	18	18	-	18
Middle/leg s. inclination angle – pivot [°]:	-	-	-	-	-	+20	+20
Leg section inclination angle [°]:	-	-	0/+90	-	0/+90	0/+90	0/+90
Height adjustment (el./H) [cm]:	50-94/ 50-94	50-94/ 50-94	50-94/ 50-94	50-94/ 50-94	50-94/ 50-94	52,5-96,5/ 52,5-98,5	52,5-96,5/ 52,5-98,5
Weight [kg]:				approx. 85			
Max. safe load [kg]:				185			
Power supply (only in electric versions) [V/Hz]:				100-240/50-60			

Safari **Elephant B-S1.F0/ B-S1.F4/B-S1.F0-H/B-S1.F4-H**

Neurological rehabilitation table

MD



Electric height adjustment



Hydraulic height adjustment

Box dimensions: **220 x 136 x 75 cm** Weight: **+90 kg**

Neurological rehabilitation table **Safari type Elephant** is designed for improving the motor skills of children with central nervous system impairment as well as Bobath and Vojta treatment.

Length: **200 cm**

Height: **50-99 cm**

Width: **120 cm**

Weight: **150 kg**

Max load*: **200 kg**

Features:

- 1-section table (electric or hydraulic).
- Extra wide surface.
- Two-layer padding with upholstery in many colours**.
- Powder coated, very wide and stable steel frame.
- Personal Authorization Safety System with 2 magnetic safety keys (only in el. version).
- HalloTronic® System for electric high/low height adjustment from 50 to 99 cm (el. version).
- Hydraulic high/low height adjustment (50-99 cm) via foot pedal accessible from both sides of the table (hydr. version).
- Powder coated steel high/low height adjustment foot bar accessible from each side of the table (el. version).
- Rubber feet with 1 cm height adjustment allowing for the levelling of the table.
- F4 wheeling system - dual-lever retractable castor wheeling system composed of 4 directional castors with central brake and 4 legs with rubber feet.
- Max. lifting capacity up to 200 kg.
- Two ways of frame painting: „white" or „twintone".
- Max. working load up to 275 kg.

Table articulations:

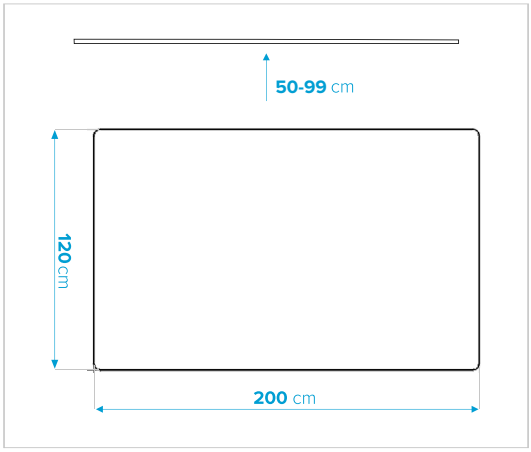

Additional option:

- Face hole.
- Hand-operated remote controller (only in el. version).
- Upholstery of 80 mm thickness.
- LUX upholstery (PU).

Additional accessories:

- Paper holder.
- Wedges.
- Bolsters, semi-bolsters.
- Stools for therapist.

Ordering information:

B-S1.F0/B-S1.F0-H: 1-section electric/hydraulic neurological rehabilitation table with basic wheeling system composed of 2 small wheels and 2 legs with rubber feet.

B-S1.F4/ B-S1.F4-H: 1-section electric/hydraulic neurological rehabilitation table with dual-lever retractable castor wheeling system composed of 4 directional castors with central brake and 4 legs with rubber feet.

* max. lifting capacity

** The transition to LUX upholstery as the standard upholstery is currently in progress. Once completed, the current standard upholstery will be phased out.

Safari **Elephant B-S2.F0/ B-S2.F4/B-S2.F0-H/B-S2.F4-H**

Neurological rehabilitation table

MD



Electric height adjustment



Hydraulic height adjustment

Box dimensions: **220 x 136 x 75 cm** Weight: **+90 kg**

Neurological rehabilitation table **Safari type Elephant** is designed for improving the motor skills of children with central nervous system impairment as well as Bobath and Vojta treatment.

Length: **200 cm**

Height: **50-99 cm**

Width: **120 cm**

Weight: **150 kg**

Max load*: **200 kg**

Features:

- 2-section table (electric or hydraulic).
- Extra wide surface.
- Adjustable head section from 0° to +85° via 2 gas springs.
- Two-layer padding with non-flammable, bio-compatible and scratchproof upholstery in many colours**.
- Powder coated, very wide and stable steel frame.
- Personal Authorization Safety System with 2 magnetic safety keys (only in el. version).
- HalloTronic® System for electric high/low height adjustment from 50 to 99 cm (electric version).
- Hydraulic high/low height adjustment (50-99 cm) via foot pedal accessible from both sides of the table (hydraulic version).
- Powder coated steel high/low height adjustment foot bar accessible from each side of the table (electric version).
- Rubber feet with 1 cm height adjustment allowing for the levelling of the table.
- F4 wheeling system - dual-lever retractable castor wheeling system composed of 4 directional castors with central brake and 4 legs with rubber feet.
- Max. lifting capacity up to 200 kg.
- Two ways of frame painting: „white" or „twintone".

Table articulations:

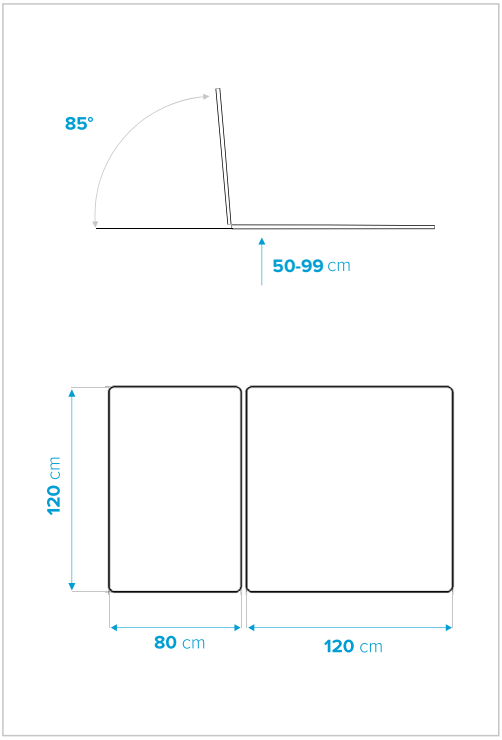

Additional option:

- Face hole.
- Hand-operated remote controller (only in el. version).
- Upholstery of 80 mm thickness.
- LUX upholstery (PU).

Additional accessories:

- Paper holder.
- Wedges.
- Bolsters, semi-bolsters.
- Stools for therapist.

Ordering information:

B-S2.F0/B-S2.F0-H: 2-section electric/hydraulic neurological rehabilitation table with basic wheeling system composed of 2 small wheels and 2 legs with rubber feet.

B-S2.F4/B-S2.F4-H: 2-section electric/hydraulic neurological rehabilitation table with dual-lever retractable castor wheeling system composed of 4 directional castors with central brake and 4 legs with rubber feet.

* max. lifting capacity

** The transition to LUX upholstery as the standard upholstery is currently in progress. Once completed, the current standard upholstery will be phased out.

Safari **Elephant B90-S1.F0/ B90-S1.2F2**

Neurological rehabilitation table

MD



Safari Elephant B90-S1.F0



Safari Elephant B90-S1.2F2

Length: **200 cm**

Height: **50-99 cm**

Width: **90-130 cm**

Weight: **150 kg**

Max load*: **200 kg**

Features:

- 1-section tables.
- A wide range of models designed to meet diverse needs and expectations.
- Extra wide surface in many possible sizes: 90/100/110/120/130 cm
- Two-layer padding with upholstery in many colours (LUX Upholstery).
- Table top sides lined with special upholstery that is highly resistant to damage.
- Powder coated, very wide and stable steel frame.
- Electric high/low height adjustment from 50 to 99 cm via hand remote controller.
- Foot remote controller for electric high/low height adjustment (option).
- Authorization via key on hand remote controller.
- AutoLock function (option) – ensures protection against accidental changes in table position. It activates automatically and locks actuators 10 s after last use of table controls.
- F0 wheeling system – composed of 2 legs with rubber feet and 2 legs with small wheels (Ø 5 cm)
- 2F2 wheeling system – dual-lever retractable castor wheeling system composed of 2 x 2 directional castors (Ø 7,5 cm) and 4 legs with rubber feet. Dual-levers at the front and at the rear of the table operate indepenently.
- Rubber feet with 1 cm height adjustment allowing for the levelling of the table.
- The distance between the bottom frame and the floor: 15 cm.
- Max. lifting capacity up to 200 kg.
- Max. working load up to 275 kg.

Table articulations:

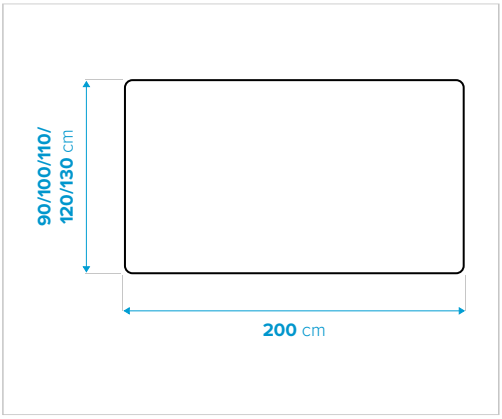

Additional accessories:

- Paper holder.
- Wedges, bolsters, semi-bolsters.
- Stools for therapist.

Additional options:

- AutoLock function.
- Foot remote controller.
- Folding barriers, set of 2 pcs.

Technical data:

	B90-S1.F0	B90-S1.2F2
Length [cm]:	200	200
Width [cm]:	90 / 100 / 110 / 120 / 130	90 / 100 / 110 / 120 / 130
Number of sections:	1	1
Height adjustment [cm]:	50-99 (electrical)	50-99 (electrical)
Power supply [V/Hz/A]:	100-240 / 50-60 / 3-1,5	100-240 / 50-60 / 3-1,5
Wheels F0 / Castors 2F2 Ø [cm]:	5	7,5
Max. lifting capacity [kg]:	200	200
Max. working load [kg]:	275	275
Weight [kg]:	≤ 150 (depending on the version)	≤ 150 (depending on the version)

* max. lifting capacity

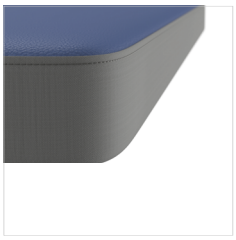

Lined with special upholstery.

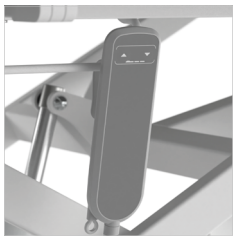

Equipped as standard with a hand remote controller.

Safari **Elephant B140-S1.F0/ B140-S1.2F2**

Neurological rehabilitation table

MD



Safari Elephant B140-S1.F0



Safari Elephant B140-S1.2F2

Length: **200 cm**

Height: **50-99 cm**

Width: **160 cm**

Weight: **150 kg**

Max load*: **200 kg**

Features:

- 1-section tables.
- A wide range of models designed to meet diverse needs and expectations.
- Extra wide surface: 160 cm.
- Two-layer padding with upholstery in many colours (LUX Upholstery).
- Table top sides lined with special upholstery that is highly resistant to damage.
- Powder coated, very wide and stable steel frame.
- Electric high/low height adjustment from 50 to 99 cm via hand remote controller.
- Foot remote controller for electric high/low height adjustment (option).
- Authorization via key on hand remote controller.
- AutoLock function (option) – ensures protection against accidental changes in table position. It activates automatically and locks actuators 10 s after last use of table controls.
- F0 wheeling system – composed of 2 legs with rubber feet and 2 legs with small wheels (Ø 5 cm)
- 2F2 wheeling system – dual-lever retractable castor wheeling system composed of 2 x 2 directional castors (Ø 7,5 cm) and 4 legs with rubber feet. Dual-levers at the front and at the rear of the table operate indepenently.
- Rubber feet with 1 cm height adjustment allowing for the levelling of the table.
- The distance between the bottom frame and the floor: 15 cm.
- Max. lifting capacity up to 200 kg.
- Max. working load up to 275 kg.

Table articulations:

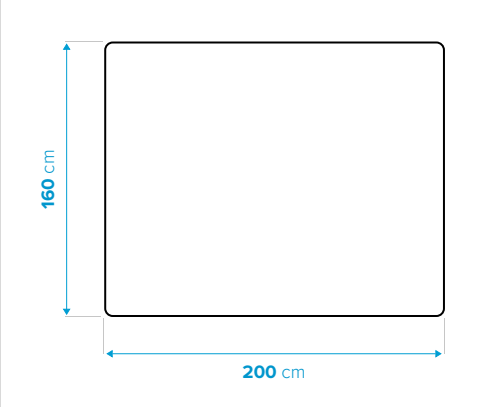

Additional accessories:

- Paper holder.
- Wedges, bolsters, semi-bolsters.
- Stools for therapist.

Additional options:

- AutoLock function.
- Foot remote controller.
- Folding barriers, set of 2 pcs.

Technical data:

	B140-S1.F0	B140-S1.2F2
Length [cm]:	200	200
Width [cm]:	160	160
Number of sections:	1	1
Height adjustment [cm]:	50-99 (electrical)	50-99 (electrical)
Power supply [V/Hz/A]:	100-240 / 50-60 / 3-1,5	100-240 / 50-60 / 3-1,5
Wheels F0 / Castors 2F2 Ø [cm]:	5	7,5
Max. lifting capacity [kg]:	200	200
Max. working load [kg]:	275	275
Weight [kg]:	≤ 150 (depending on the version)	≤ 150 (depending on the version)

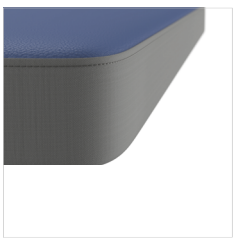

Lined with special upholstery.

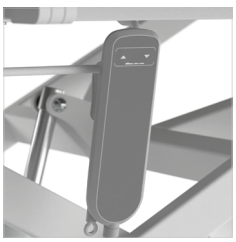

Equipped as standard with a hand remote controller.

* max. lifting capacity

Safari **Elephant B90-S2.F0/ B90-S2.2F2**

Neurological rehabilitation table

MD



Safari Elephant B90-S2.F0



Safari Elephant B90-S2.2F2

Length: **200 cm**

Height: **50-99 cm**

Width: **90-130 cm**

Weight: **150 kg**

Max load*: **200 kg**

Features:

- 2-sections tables.
- Adjustable head section 0° – 85° via 2 gas springs.
- A wide range of models designed to meet diverse needs and expectations.
- Extra wide surface in many possible sizes: 90/100/110/120/130 cm
- Two-layer padding with upholstery in many colours (LUX Upholstery).
- Table top sides lined with special upholstery that is highly resistant to damage.
- Powder coated, very wide and stable steel frame.
- Electric high/low height adjustment from 50 to 99 cm via hand remote controller.
- Foot remote controller for electric high/low height adjustment (option).
- Authorization via key on hand remote controller.
- AutoLock function (option) – ensures protection against accidental changes in table position. It activates automatically and locks actuators 10 s after last use of table controls.
- F0 wheeling system – composed of 2 legs with rubber feet and 2 legs with small wheels (Ø 5 cm)
- 2F2 wheeling system – dual-lever retractable castor wheeling system composed of 2 x 2 directional castors (Ø 7,5 cm) and 4 legs with rubber feet. Dual-levers at the front and at the rear of the table operate indepenently.
- Rubber feet with 1 cm height adjustment allowing for the levelling of the table.
- The distance between the bottom frame and the floor: 15 cm.
- Max. lifting capacity up to 200 kg.
- Max. working load up to 275 kg.

Table articulations:

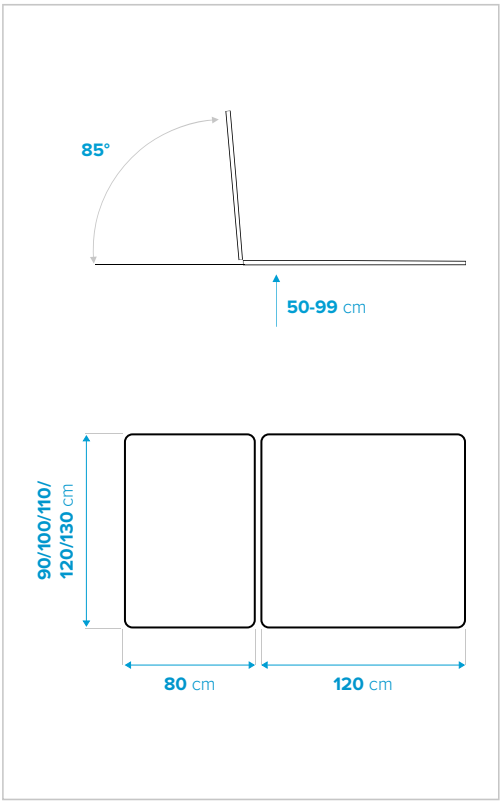

Additional accessories:

- Paper holder.
- Wedges, bolsters, semi-bolsters.
- Stools for therapist.

Additional options:

- AutoLock function.
- Foot remote controller.

Technical data:

	B90-S2.F0	B90-S2.2F2
Length [cm]:	200	200
Width [cm]:	90 / 100 / 110 / 120 / 130	90 / 100 / 110 / 120 / 130
Number of sections:	2	2
Height adjustment [cm]:	50-99 (electrical)	50-99 (electrical)
Power supply [V/Hz/A]:	100-240 / 50-60 / 3-1,5	100-240 / 50-60 / 3-1,5
Wheels F0 / Castors 2F2 Ø [cm]:	5	7,5
Max. lifting capacity [kg]:	200	200
Max. working load [kg]:	275	275
Weight [kg]:	≤ 150 (depending on the version)	≤ 150 (depending on the version)

* max. lifting capacity

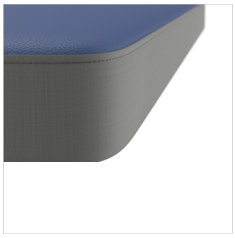

Lined with special upholstery.

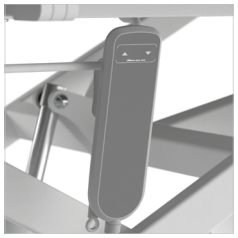

Equipped as standard with a hand remote controller.

Chirospace | Chiropractic table

MD

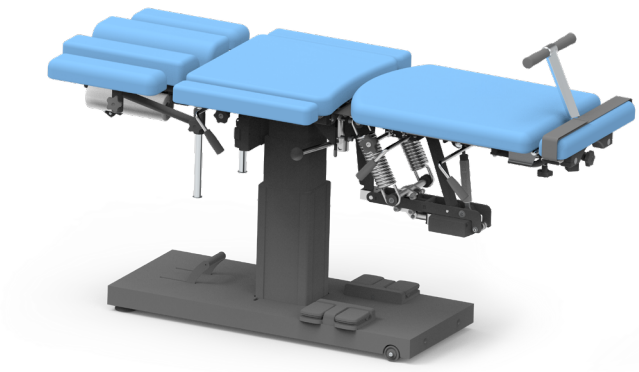

Chirospace with fold-down side sections



Box dimensions: **220 x 68 x 75 cm** Weight: **+25 kg**

Length: **185-210 cm**

Height: **55-96 cm**

Width: **55 cm**

Weight: **135 kg**

Max load*: **180 kg**

7-section chiropractic table **Chirospace** is a multifunctional equipment that ensures comfort of work for every therapist. Thanks to the ergonomic construction of the table top, with the possibility of lateral and vertical rotation of the foot section, the physiotherapist can adjust the initial correction of the patient's spine, work on soft tissues, and perform any manual procedures.



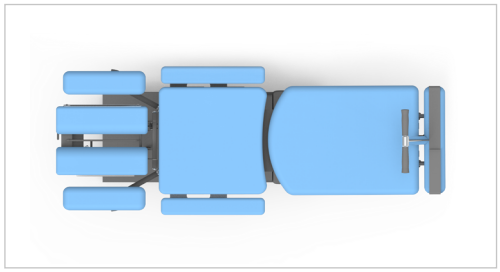

Features:

- 7-section table, expandable to 9 sections with optional fold-down sides.
- Headrest top surface level with the table surface.
- Head section divided into 2 parts (adjustable gap: 1-5 cm).
- 2 possibilities of head section adjustment: from -35° to +25° with a gas spring and additional adjustment from 0° to +18° (in oposite direction) via second gas spring.
- Rotating slide down armrests (adjustment range: up to -24 cm vertical).
- Adjustable armrest angle.
- 2 possibilities of leg section adjustment: from 0° to -25° and side rotation from -15° to 15°.
- Electric high/low height adjustment via foot-operated controller at two sides of the table base.
- 3-layer padding 40 mm, with LUX (PU) upholstery in many colours.
- Shift of shank support: 0-24 cm.
- Settings lock: rotation and shift.
- DROP techniques (2 DROPS): for thoracic section, for lumbar section.
- Mechanism of dynamic force compensation - to minimize the patient's body weight resting on the leg section of the table via an offload and stearing mechanism.
- 2 fixed wheels + 2 castors central lifted (F2 system).
- Paper towel holder.

Technical data:

Dimensions (LxW) [cm]:	185-210 x 50 (55 - head section + armrest)
Dimensions (LxW) [cm]:	185–210 × 70 (with optional fold-down sides)
Height adjustment [cm]:	55-96
Weight [kg]:	135
Max. lifting capacity [kg]:	180
Shift [cm]:	0-24
Power supply [V; Hz]:	100-240; 50-60

* max. lifting capacity

Additional accessories:

- Wedges.
- Bolsters, semi-bolsters.
- Stools for therapist.

Additional options:

- Fold-down side sections in the middle section.

Vertimo Classic/Hi-Lo | Tilting tables



MD

Box dimensions: **220 x 85 x 80 cm** Weight: **+50 kg**

Tilting table **Vertimo type Classic** - very stable 1-section tilting table with electric adjustment of verticalization.

Features:

- 1-section table.
- Electric actuator for tilting adjustment.
- Manual remote control for the adjustment of tilting angle with access authorization - with a special key placed in the remote control.
- Brackets for the attachment of fastening belts (standard accessories).
- Two-layer padding with upholstery in many colours*.
- Powder coated, very stable steel frame.
- 4 large separately lockable castors (rolling and rotation lock).
- Emmergency power supply battery.
- LUX upholstery (PU) - option.

Technical data:

Footrest inclination angle [°]:	-15/0
Number of sections:	1
Dimensions (L x W) [cm]:	190 x 69
Table top inclination angle [°]:	0-87 (+3)
Height [cm]:	53 (fixed)
Max. table load [kg]:	150
Weight [kg]:	75
Power supply [V/Hz]:	100-240 / 50/60

Additional accessories for Vertimo line:

- Adjustable support under the arm.
- Top of the small table.
- Stools for therapist.



Small table

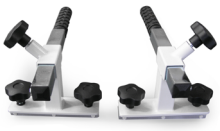

Arm supports



1-section (UNO)



2-section (DUO)



2-section (DUO+)

Box dimensions: **220 x 85 x 80 cm** Weight: **+50 kg**

Tilting table **Vertimo type HI-LO** - very stable 1- or 2-section tilting table with eletric adjustment of verticalization. Available in 3 ver.:

- 1-section (**UNO**) tilting table,
- 2-section (**DUO**) tilting table,
- 2-section (**DUO+**) tilting table.

Velcro fastening belts:

- 2 pcs: 200 x 19,5 cm
- 1 pc: 200 x 14,5 cm

Features:

- 1 or 2-section table.
- 2 electric actuators – one ensures smooth tilting; the other one adjusts height.
- Electric height and tilting adjustment with manual remote control with the function of access authorization - authorization is done by a special key placed in the remote control.
- Two-layer padding with upholstery in many colours**.
- Powder coated, very stable steel frame.
- 2 separately adjustable footrests.
- Brackets for the attachment of fastening belts (standard accessories).
- 4 large separately lockable castors (rolling and rotation lock).
- Tilt angle indicator.
- Emergency power supply battery (allows table lowering to min. height and return to horizontal position at power failures).
- Vertimo Hi-Lo DUO+ - table with faster actuator, quick release system (ensures fast table top lowering in emergency situations), bracket for leg belts.
- LUX upholstery (PU) - option
- Vertimo UNO and DUO feature a lower-profile base frame, allowing for a lower minimum table height and easier transfers from a wheelchair onto the table.

Technical data:

Number of sections:	1 or 2
Dimensions (L x W) [cm]:	190 x 69
Footrest length [cm]:	36
Table top inclination angle [°]:	0-87 (+3)
Head section inclination angle (2-section ver.) [°]:	0-85
Footrest inclination angle [°]:	-15/0
Height adjustment (1-, 2-section ver./DUO+ ver.) [cm]:	48-98/54-92
Max. table load [kg]:	150
Weight [kg]:	115
Power supply [V/Hz]:	100-240 / 50/60

* The transition to LUX upholstery as the standard upholstery is currently in progress. Once completed, the current standard upholstery will be phased out.

Fiji P5/P7

Pacific examination and treatment tables

Hawaii S2/S4

Pacific examination and treatment tables



MD



Box dimensions: **220 x 95 x 95 cm** Weight: **+50 kg**

Length: **212 cm**

Height: **64-104 cm**

Width: **80 cm**

Weight: **150/130 kg**

Max load*: **150 kg**

Pacific examination and treatment table is intended for standard examinations and procedures carried out in a wide scope, also used for simple medical activities. It is usually used in professional medical care facilities, i.e. hospital, clinic, as well as in doctor's offices, treatment rooms or diagnostic laboratories.

Additional option:

- Integrated option of heating and LED lights.

Features:

- 5- or 7-section examination and treatment table with electric height adjustment by the means of a remote (controller).
- Head section adjustment by the means of gas spring.
- Head rest with shaped face hole with crescent plug.
- Foldable armrests lowered till 19 cm (only in 7 section table) .
- Adjustment of: back, thighs, shanks sections by means of electric actuators.
- Multi-layered and very soft padding of 15 cm thickness with upholstery in many colours (LUX upholstery or Premium upholstery in colour: White).
- Trendelenburg/reverse Trendelenburg position (15°).
- 2 wheels.
- Central lift (2 castors central lifted).

Technical data:

	FIJI	HAWAII
Number of sections:	5 or 7	2 or 4
Height adjustment [cm]:	64-104	64-104
Dimensions (L x W) [cm]:	212 x 80	212 x 80
Weight [kg]:	150	130
Max. lifting capacity [kg]:	150	150
Power supply [V/Hz]:	120-240 / 50/60	120-240 / 50/60

Features:

- 2-section or 4-section examination and treatment table with electric height adjustment by the means of a remote (controller).
- Head section adjustment by the means of gas spring.
- Head rest with shaped face hole with crescent plug.
- Foldable armrests lowered till max. 19 cm (only in version 4-section).
- Multi-layered and very soft padding of 15 cm thickness with upholstery in many colours (LUX upholstery or Premium upholstery in colour: White).
- Trendelenburg/reverse Trendelenburg position (15°).
- 2 wheels.
- Central lift (2 castors central lifted).

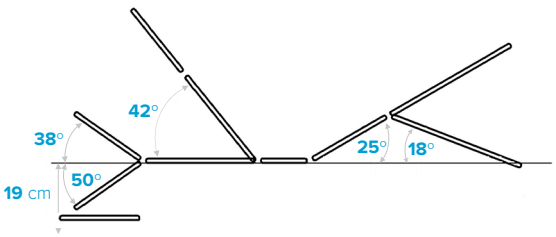

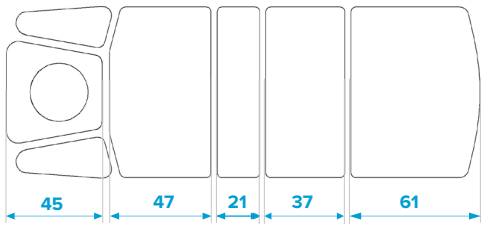

P7

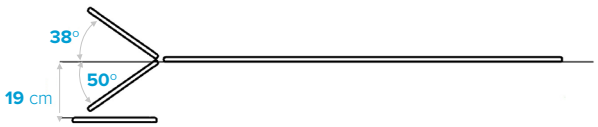

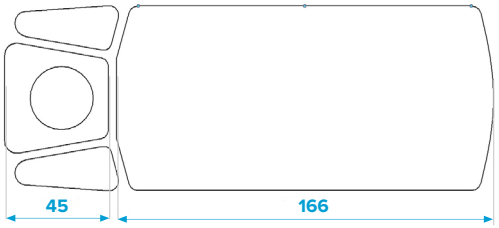

P4

* max. lifting capacity

Kangoo S3.C4 | Examination and treatment table

MD





Box dimensions: **220 x 85 x 75 cm** Weight: **+50 kg**

Length: **189 cm** Height: **46-91 cm** Width: **72 cm** Weight: **116 kg** Max load*: **250 kg**

Examination and treatment table **Kangoo model S3.C4** is intended for standard examinations and procedures carried out in a wide scope. Well-thought-out design, the possibility to adjust the angles of individual table sections and the stability of the product ensure that the patient is in a comfortable position for examination/ treatment.
The table offers possibility of the Trendelenburg and reverse Trendelenburg position (18°).

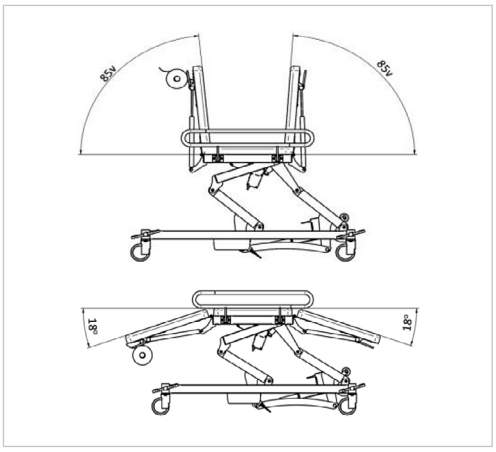



Features:

- 3- section table, with a long head section.
- Adjustable head and foot section from -18° to 85° with a gas springs.
- Trendelenburg/reverse Trendelenburg.
- Face hole in the head section with a removable face hole cover.
- Two-layer padding with upholstery in many colours**.
- Powder coated stable steel frame.
- 2 folding horizontal barriers on both sides; fold-down when table subjected to normal use activities.
- Electric height adjustment (47-92 cm) using manual remote control.
- Battery backup, cordless operation.
- Safety - table equipped with an access lock - safety key and automatic locking (to lock height adjustment function).
- 4 large 125 mm braked castors with foot locking mechanism.
- LUX upholstery (PU) as option.

Technical data:

Height adjustment [cm]:	46-91
Dimensions (length x width) [cm]:	189 x 72
Weight [kg]:	116
Max. lifting capacity [kg]:	250
Paper roll width [cm]:	60
Power supply [V/Hz]:	100-240/50-60

Additional accessories:

- Paper holder.
- Wedges.
- Bolsters, semi-bolsters.
- Stools for therapist.
- Basket e.g. dor clothes.

* max. lifting capacity

** The transition to LUX upholstery as the standard upholstery is currently in progress. Once completed, the current standard upholstery will be phased out.

Safari
Puma/Leopard

Treatment and examination table

MD





Box dimensions: **220 x 85 x 80 cm** Weight: **+50 kg**

Length: **204-208 cm**

Height: **52-93 cm**

Width: **69 cm**

Weight: **≤ 115 kg**

Max load*: **200 kg**

Features:

- 2-, 3-, 4- or 5-section table.
- Rotating armrests in head section (S4, S5 versions).
- Width of table top: 69 cm.
- Adjustable head section from -70° to +40° with a gas spring (-20° to 85° in E-S2 version (tables with long head section)).
- Round face hole in the head section with a removable face hole cover which increases patient's comfort (2 types of cover: round and crescent).
- Adjustable leg section from 0° to 90° with a gas spring.
- Two-layer padding with upholstery in many colours**.
- Powder coated, very stable scissor steel frame.
- 2 side brackets for the fixation of stabilization belts and elastic bands.
- Traction support sleeves.
- Electric high/low height adjustment with a lifting capacity up to 200 kg.
- At bumpers option head section can't lower below 0°.

Technical data:

	Puma S2	Puma E-S2	Puma S4	Leopard S3	Leopard S5
Dimensions (length x width) [cm]:	204 x 69	208 x 69	204 x 69	205 x 69	205 x 69
Number of sections:	2	2	4	3	5
Head section inclination angle [°]:	-70/+40	-20/+85	-70/+40	-70/+40	-70/+40
Middle section inclination angle [°]:	-	-	-	-	-
Leg section inclination angle [°]:	-	-	-	0/+90	0/+90
Height adjustment [cm]:	52-93	52-93	52-93	52-93	52-93
Weight [kg]:	≤ 115	≤ 115	≤ 115	≤ 115	≤ 115
Max. lifting capacity [kg]:	200	200	200	200	200
Power supply [V/Hz/A]:	100-240/50-60/3-1,5				

Additional option:

- Upholstery of 80 mm thickness.
- Upholstery of 80 cm width.
- Head section without face hole.
- Wheels of bigger diameter (C version).
- Hand- or foot- operated controller.
- Bumpers.
- Equipotential pin.
- CPR (for lowering the table enabling proper cardiopulmonary resuscitation).
- LUX upholstery (PU)
- AutoLock.

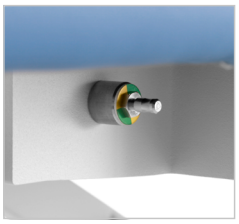

Equipotential pin

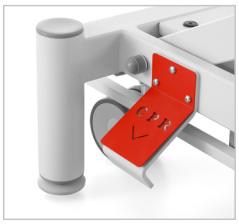

CPR

Additional accessories:

- Bolsters, wedges.
- Traction supports.
- Horizontal folding barriers.
- Rail for mounting accessories.
- Paper holder.
- Stabilization belts.

Ordering information:

S2.M4 **S2.M4-C** **E-S2.M4** **E-S2.M4-C** **S4.M4** **S4.M4-C** **S3.M4** **S3.M4-C** **S5.M4** **S5.M4-C**

M4 - castors of 10 cm diameter
M4-C - castors of 12,5 cm diameter

* max. lifting capacity

** The transition to LUX upholstery as the standard upholstery is currently in progress. Once completed, the current standard upholstery will be phased out.

Safari Buffalo E2.C4-H | Patient transport table





Length: **228 cm** | Hight: **51-100 cm** | Width: **80 cm** | Weight: **135 kg** | Max load*: **200 kg**

Patient transport table **Safari type Buffalo** is designed for efficient transport in medical facilities. The table ensures easy operation for caregivers. The simple design provides reduced effort for medical personnel, improved quality of patient care and greater comfort for the patient.

Features:

- 2-sections transport table with a powerful hydraulic actuator.
- Adjustable, long head section from 0° to +70° with 2 gas springs .
- Removable matress (60 mm thickness) made of high-quality polyurethane foam (40-45 kg/m^3) and fabric in black colour; fabric features: flame retardant/mildew resistant/impermeable/easy to clean (can be washed in 60-90°C, resistant for disinfectants).
- Powder coated, very stable scissor steel frame.
- Hydraulic high/low height adjustment with a lifting capacity up to 200 kg.
- High/low height adjustment from 51 to 100 cm with foot pedal accessible from both sides of the table.
- 4 large 125 mm TENTE noiseless castors (total lock) which increase manoeuvrability; 1 electro-conductive (anti-static) wheel marked with a yellow-coloured border, to prevent electrostatic discharge.

Accessories:

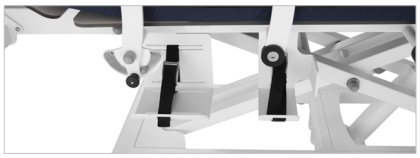

Hanger for oxygen tank

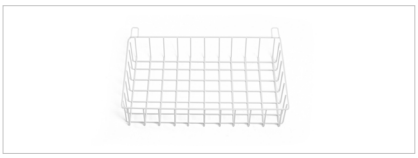

Basket for i.e. clothes



Drip hanger (can be attached on both sides in easy and fast way)



600 mm wide paper towel hanger located on the head section

* max. lifting capacity

** Patient transport table SAFARI BUFFALO E2.C4 with electric height adjustment - soon in offer.

Table articulations:

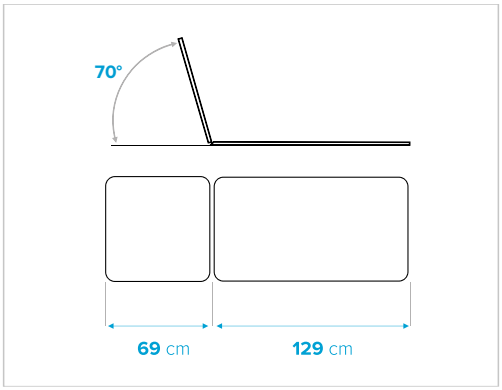

Equipped with:

- Folding horizontal barriers on both sides
- Handles for transport on the head and leg sections
- Bumpers at the corners

Technical data:

Dimensions (length x width) [cm]:	228 x 80
Number of sections:	2
Head section inclination angle [°]:	0/+70
Lenght of head section [cm]:	69
Height adjustment [cm]:	51-100
Weight [kg]:	135
Max. lifting capacity [kg]:	200

Additional option:

- The table offers possibility of the Trendelenburg/ reverse Trendelenburg position (-10°/+10°).

LZM type 3 | Metal treatment couch

Stools for therapist



MD

Box dimen.: **198 x 66 x 17 cm** Weight: **+2 kg**

LZM type 3:

LZM couches are designed to be used in therapeutic procedures to heal or provide relief in injuries or other impairments by means of natural physical factors. The couch is also used in doctor's surgeries. It allows the patients to assume a comfortable horizontal position thanks to its adjustable head rest.

Features:

- Adjustable head rest (10 steps) (from 0° to 50°).
- Padding with upholstery in many colours*.
- Powder coated, very stable steel frame.
- Paper towel hanger (option).

Technical data:

Number of sections:	2
Head rest angle adjustment [°]:	0/+50
Dimensions (L x W) [cm]:	193 x 61
Hight [cm]	65
Max. paper width [cm]:	60
Weight [kg]:	16
Max. safe load [kg]:	150

Accessories:



Paper roll hanger

* The transition to LUX upholstery as the standard upholstery is currently in progress. Once completed, the current standard upholstery will be phased out.



Box dimen.: **60 x 59 x 24 cm** Weight: **+1,5 kg**

Stool for therapist **Flex (saddle stool):** lightweight and comfortable stool for physicians and therapists with chrome-plated base and column.

Features:

- Upholstery in many colours*.
- Height adjustment.
- Tilting seat (front/back).
- Chrome-plated base.
- Rubberised castors.

Technical data:

Height [cm]:	54-74
Tilting adjustment [°]:	15
Max. load [kg]:	150
Weight [kg]:	7,5
Base ø [cm]:	60
Seat dimension [cm]:	43x34

Option:

- version with self breaking castors.
- LUX upholstery (PU).



Box dimen.: **60 x 59 x 18 cm** Weight: **+1 kg**

Stool for therapist **Standard (round stool):** lightweight and comfortable stool for physicians and therapists.

Features:

- Upholstery in many colours*.
- Height adjustment.
- Chrome-plated base.
- Rubberised castors.

Technical data:

Height [cm]:	52-72
Max. load [kg]:	150
Weight [kg]:	6,5
Base ø [cm]:	60
Seat dimension ø [cm]:	36

Option:

- version with self breaking castors.
- LUX upholstery (PU).

DeMiro Spine Stool | Rehabilitation stool



Box dimensions: **50,5 x 47,5 x 32,5 cm** Weight: **+2,8 kg**

Adjustment by means of rear screw

Special care should be taken when using the stool with the rear screw loosened. The manufacturer cannot be held responsible for the rapid lowering of the rear part of the seat when the upper body is tilted backwards, which can lead to a loss of balance and a fall from the stool. Tighten the rear screw as far as it will go to eliminate the risk of falling backwards.

Loosen the rear screw to the desired position to allow the seat to tilt backwards. When sitting for long periods, the back and forth movement of the seat provides an opportunity to exercise the spine. Please note that prolonged sitting with the back in a hunched position can be harmful to the spine.

Seat adjustment by foot position

Adjust the seat position by moving one or both feet forwards and backwards to find the optimum seat angle. Moving your feet forward puts more pressure on the front of the seat, which raises your spine and relaxes the muscles in your back. If you extend your foot too far, you may experience back discomfort.

Seat adjustment by chest position

Raise or lower your chest to find the optimum seat angle. Raising the chest brings the spine into a more upright position, while lowering the chest brings the spine into a more hunched position.

Technical data:

	large spring	small spring
Base width [mm]:	500	500
Total height [mm]:	min. 475 - max. 605	min. 432 - max. 534
Seat length [mm]:	360	360
Seat width [mm]:	450	450
Seat thickness [mm]:	55	55
Seat inclination angle (up/down) [°]:	0-18	0-18
Seat recess length [mm]:	178	178
Seat recess width [mm]:	174	174
Height adjustment range [mm]:	130	130
Diameter of foot with pin [mm]:	50	50
Maximum safe load of the stool [kg]:	≤ 135	≤ 135
Product weight [kg]:	10.5	10.5
Weight of the product in the cardboard box [kg]:	13.3	13.3

Supports correct posture

The stool's ability to rotate horizontally the body in space (360°) makes it easy to adapt to different working positions. Regular use helps to maintain correct posture, which can ultimately help to reduce the discomfort associated with sitting for long periods of time.

Adjustable seat height

The seat height adjustment allows precise positioning to achieve a 90-degree knee flexion angle. This is one of the elements that helps to maintain correct posture by reducing the load on the spine and the risk of hunching.

Comfort and ergonomics at the same time

Using a seat that tilts back and forth allows you to adjust the angle to match the natural curves of the spine, helping to maintain correct posture.



A movable seat that adjusts to the user's movements



Screws for adjusting the angle of the stool forwards (1) and backwards (2)

Upholstery: LUX upholstery (standard), DIO7 upholstery (option).

Qubiq, Medcart, Trolmed | Medical equipment trolleys

Excellent sollution for electro- and physical therapy rooms. The construction of the trolley is designed specifically to accommodate the various types of medical equipments and allows easy access to them by appropriate arrangement of shelves in the space of the trolley. The wheels ensure the mobility of the trolley and effortless maneuverability, and the brakes ensure stability and safety during treatments.

Medical equipment trolley Qubiq

Features:

- Compact shape.
- Stable.
- Made of aluminium, powder coated.
- 1 top.
- 1 practical recessed shelf.
- 2 drawers.
- Noiseless 4 transport wheels with brake.

Additional option:

- Top extention with US head holder (for 2 heads and 11,3 cm hole for cream).
- Insert to reduce the cream hole (to a diameter of 8,3 cm).
- Cover for the trolley top.



Technical data:

Dimensions (LxWxH) [cm]:	47,7 x 34,8 x 75,6
Dimensions (QUBIQ + top extention) (LxWxH) [cm]:	52,2 x 34,8 x 104,2
Dimensions (top extention) (LxWxH) [cm]:	22,2 x 28,6 x 32,2
Max. load (max. safe trolley load with accessories) [kg]:	30
Drawer max. load [kg]:	5
Weight [kg]:	16,5
Weight with top extention [kg]:	18,5

Medical equipment trolley Medcart

Features:

- Compact shape.
- Stable.
- Made of aluminium, powder coated.
- 2 shelves.
- Noiseless 4 transport wheels with brake.
- Version with drawer available.



Technical data:

	Medcart (drawer)	Medcart
Dimensions (LxWxH) [cm]:	58x34x76	39 x 35 x 76
Max. load (max. safe trolley load with accessories) [kg]:	40	15
Shelf max. load [kg]:	35*	6
Drawer max. load [kg]:	5	-
Weight [kg]:	15	7

* Maximum total load on both shelves.

Trolley for medical devices Trolmed type SPA-2

Features:

- Compact shape.
- Powder coated steel.
- 2 shelves.
- 4 transport wheels; with brake.
- Removable 22l basket (optional accessory).
- Removable 5l basket (optional accessory).

optional accessory:





Technical data:

Dimensions (WxDxH) [cm]:	54 x 43 x 89,5
Max. load (per shelf) [kg]:	25
Max. load (per basket / per small basket) [kg]:	5 / 2
Weight [kg]:	14

Other equipment

As in this catalogue we presented only a part of our varied offer we encourage you to browse our full offer online:

en.meden.com.pl



You can find there:

- massage tables,
- physiotherapy devices,
- devices for neurological rehabilitaion,
- many accessories as bolsters, wedges, stabilization belts, traction supports,
- devices for supporting spine rehabilitation,
- medical and training treadmills,
- patient lifts,
- neurological walkers,

... and many others.

How to order easily

If our catalogue is of interest to you and you want to order any of presented products, please don't hesitate to contact us:



European markets

Kamilla Modzelewska
Senior Export Manager
km@meden.com.pl
+48 94 344 90 50
+48 602 668 002



France, French-speaking Africa

Renata Bryła
Senior Key Account Manager
rbryla@meden.com.pl
+48 573 893 795



CIS region, Ukraine, Georgia, Lithuania, Latvia, Estonia

Oksana Ardan
Key Account Specialist
oardan@meden.com.pl
+48 94 347 10 67
+48 607 566 302



North/South America, Africa, Ireland, GB, Scandinavian countries

Tomasz Górecki
Key Account Manager
tgorecki@meden.com.pl
+48 601 646 866



Australia, Asia and Middle East, Egypt, Slovakia, Czech Republic

Mariusz Rubik
Key Account Specialist & Training Consultant
mrubik@meden.com.pl
+48 690 266 543



Mateusz Baranowski
Training Consultant
mbaranowski@meden.com.pl
+48 663 152 888



Aleksander Kotulecki
International Business Development Manager
akotulecki@meden.com.pl
+48 694 484 407



Diego Morales
International Business Development Specialist
dmorales@meden.com.pl
+48 506 547 150

Product trainings

Out of concern for our business partners, we have prepared various trainings and presentations about the products from our large offer. In our team we have a person who is responsible for our equipments' trainings, equipment demonstrations at the customers' premises, at exhibitions and congresses.





Mariusz Rubik
Key Account Specialist
& Training Consultant

mrubik@meden.com.pl
+48 690 266 543



Mateusz Baranowski
Training Consultant

mbaranowski@meden.com.pl
+48 663 152 888

Technical support

We offer you professional and comprehensive support in the field of servicing, consulting, assembly, training and repair. Our staff have specialist knowledge and constantly improve their qualifications. We have been dealing with service for many years, which gives us the necessary experience in this field. We provide a 3-month warranty for all repairs in our service. If you have a technical problem our Service Team will be ready to assist! We are sure that we will meet even the most demanding requirements.

And we would like to thank the customers who trusted us and use our service.



Marek Urbanowicz
Head of Service

murbanowicz@meden.com.pl
+48 600 693 741



Maciej Petrykowski
Service Specialist

mpetrykowski@meden.com.pl
+48 668 811 116



Tadeusz Dominkiewicz
Service Specialist

tdominkiewicz@meden.com.pl
+48 661 079 777



Tomasz Lisik
Junior Service Specialist

tlisik@meden.com.pl
+48 609 133 918

Index

A

Accessories 21,52

C

Chirospace 58

D

DeMiro 65

E

Elemental Ice 18
Elemental Ice, Fire 20
Elemental Fire 19

F

Fiji P5/P7 60

H

Hawaii S2/S4 60

K

Kangoo 61

L

LZM 64

M

Medcart 66

N

Nexus 48,49
Nexus E-S2/S2/S3/S4/S5/P3/P5 50
Nexus E-S2-H/S2-H/S3-H/S4-H/S5-H/P3-H/P5-H 51

S

Safari Buffalo E2.C4-H 63
Safari Elephant B-S1 53
Safari Elephant B-S2 54
Safari Elephant B90-S1.F0/B90-S1.2F2 55
Safari Elephant B140-S1.F0/B140-S1.2F2 56
Safari Elephant B90-S2.F0/B90-S2.2F2 57
Safari Hydraulic Tables 44
Safari Jaguar P3 41
Safari Jaguar P5 42
Safari Leopard S3 39
Safari Leopard S5 40
Safari Puma E-S2 38
Safari Puma S2 36
Safari Puma S4 37
Safari Puma/Leopard (with CPR) 62
Stools 64

T

Terapeuta Prestige E-S2 14
Terapeuta Prestige M-P3 8
Terapeuta Prestige M-P5 11
Terapeuta Prestige M-P7 13
Terapeuta Prestige M-S2 6
Terapeuta Prestige M-S3 7
Terapeuta Prestige M-S4 9
Terapeuta Prestige M-S5 10
Terapeuta Prestige M-S7 12
Theraspace E-S2 24
Theraspace M-S2 25
Theraspace M-S4 26
Theraspace Z3 27
Theraspace Z5 28
Theraspace Z7 29
Theraspace X4 30
Theraspace X6 31
Theraspace X8 32
Trolmed 66

V

Vertimo Classic/Hi-Lo 59

W

WaveMotion Ellipse 45

Q

Qubiq 66

MEDEN INMED
PROFESSIONAL MEDICAL ENGINEERING

Meden-Inmed
Wenedów 2, 75-847 Koszalin, Poland

Phone: +48 94 344 90 50, +48 94 347 10 40
Fax: +48 94 347 10 41

international@meden.com.pl
www.en.meden.com.pl

We deliver our equipment to more than 100 countries around the world:



Follow us:

TÜVRheinland CERTIFIED
Management System
EN ISO 13485:2016
+AC:2018+A11:2021
www.tuv.com
ID 0000073249

2026-11-04 / Wer. 1